MPX Energia S.A.

(Publicly-held company)

Financial statements
December 31, 2009 and 2008

(A translation of the original report in Portuguese as published in Brazil containing financial statement prepared in accordance with accounting practices adopted in Brazil)

MPX Energia S.A.
(Publicly-held company)

Financial statements

December 31, 2009 and 2008

Contents

Management Report	3 - 9
Independent auditors' report	10 - 11
Balance sheets	12
Statements of operations	13
Statements of changes in shareholders' equity	14
Statements of cash flows	15
Statements of added value	16
Notes to the financial statements	17 - 109

Management Report

Dear Shareholders,

The Management of MPX Energia S.A. ("MPX" or "Company") in compliance with the legal and statutory provisions, hereby submits to your examination the Management Report and the Financial Statements of the Company, accompanied by the Independent Auditors' Report, all referring to the fiscal year ended as of December 31, 2009.

1 Message from Management

The year 2009 saw MPX consolidate itself as an energy company with integrated systems, including the exploration and sale of natural resources, logistics for handling such resources, and the generation and sale of electricity from the explored resources or alternative sources. Our growth has been reflected in the price of our stock, which gained 231% in the year, comprehensively outperforming the Ibovespa index in the period.

Work on the Energia Pecém, MPX Pecém II and MPX Itaqui ventures progressed according to plan, with significant progress having been made by the end of the year. The Company invested R$1 billion in 3 ventures in the course of 2009, which jointly provide jobs for some 3000 workers.

Our commitment to developing projects within the most stringent technological, social and environmental standards was attested by the approval of long-term funding for Energia Pecém and MPX Itaqui. BNDES, BNB, Votorantim and Bradesco have so far provided funding for the two ventures of R$1.6 billion and the approved credit facility stands at R$2.6 billion. Energia Pecém also has an IDB credit facility of USD 327 million, participated in by the banks Calyon, BCP and CGD. The MPX Pecém II project has qualified for BNDES funding, with a credit facility of R$323 million being obtained from the bank Itaú BBA. The process of optimizing our financial structure is ongoing.

As part of our constant efforts to optimize our project management and development capacity, using world-class technology and expertise, which is highly efficient and environmentally friendly, we entered into a long-term contract with Germany's Evonik Energy Services GmbH for technology and engineering consultancy and staff training services. Evonik is the largest independent energy producer in Germany, operating gas fired and coal fired power stations generating over 2400 MW, in countries including Turkey, India and Brazil. A partnership was also entered into with COPPE-UFRJ to set up an energy generation research centre. The new centre's core objectives will be technological research and development into energy generation and the qualification and training of people in the sector. There are also plans to build laboratories to provide physical support to the planned analyses and studies. COPPE-UFRJ is also partnering MPX and the University of Tsingua, in China, for joint studies on carbon dioxide control and storage, amongst other fields.

Our substantial achievements in 2009 include the certification of 110 million tons of mineral coal resources in our Colombian concession areas, just over one year after we began our exploration campaign in the country. The Colombian exploration campaign has gathered real momentum and the results so far have been most encouraging. Our second resources and reserves report will be published in March 2010 and we will disclose our business plan for the next 10 years. We have every confidence in our ability to supply coal to all our power stations and to take advantages of opportunities for selling the commodity in the international market, maximizing our returns through an operation integrated with mines, logistics, the sale of natural resources and energy generation.

In partnership with OGX, we completed the acquisition of a 70% interest in seven onshore blocks in Parnaíba basin, inland Maranhão state, in September 2009. The blocks' natural gas exploration potential is huge, and contingent resources of 1.7 tcf have already been certified, a volume which indicates sufficient potential to supply a 1000 MW gas-fired power plant.

As a result of all continuous endeavors and the inclusion of yet another generation project in our portfolio, UTE MPX Parnaíba, whose environmental licensing process has commenced, by the end of 2010 we expect to have a diversified portfolio of licensed projects amounting to roughly 10000 MW. In the final quarter of 2009 the first stage of the 2100 MW Açu project was awarded an installation license by INEA, and IBAMA awarded a preliminary license to the 600 MW MPX Sul project, enabling this project's energy to be sold in both the free and the regulated market. The licensing process for the 2100 MW UTE Castilla in Chile is also ongoing, and we have commenced the environmental licensing process for the 3300 MW, gas-fired UTE Porto do Açu II. Our portfolio also includes some 200 MW of wind farm projects and in 2010 we will begin implementing a pilot 1 MW solar energy project in Ceará state.

We believe that the only way to conduct our business consists of establishing three pillars of sustainability: economically feasible, environmentally sustainable and socially fair ventures. We accordingly make a point of contributing to the economic, social and environmental development of the communities we operate in.

The countless social and environmental initiatives implemented in 2009 include the conclusion of Vila Canaã, involving the building of 100 homes, a school and a community centre for the families relocated by MPX Itaqui and the commencement of work of the MPX Environmental and Social Council, which ratifies the Company's commitment to sustainable practices in its ventures. The Council consists of specialists invited to advise the company on Environment and Community Relations strategies and plans. The Council will provide advice on current and future mandatory and voluntary actions. We also point out the support given to the LIFE (Lasting Initiative For Earth) project, launched in July 2009, which created a groundbreaking certification instrument for acknowledging companies undertaking commitments and developing initiatives in favor of biodiversity and protecting the Earth's natural assets.

Through plenty of endeavor and social and environmental awareness we therefore hope not only to ensure the company's growth and continuous creation of value for our shareholders, but also contribute to the sustainable government of Brazil.

2 Main headlines of 2009

- In January the Itaqui venture qualified for funding from Banco do Nordeste do Brasil (BNB) and the Pecém II venture received a bridge loan of R$305 million.

- In February IBAMA awarded Itaqui an environmental installation license, permitting construction work on the plant to start. In February the IDB also approved long-term funding for Pecém I and Itaqui.

- In March the Company signed a training, consultancy and support agreement with Evonik, one of the largest electricity companies in the world.

- In April trading commenced of MPX's GDRs in the US over-the-counter market. That month Banco Itaú BBA provided a credit facility to the Pecém II venture and the BNDES approved long-term funding for Pecém I.

- In July MPX's shares were split at the rate of 1:20.

- In September a new source of value generation began to emerge through the certification of 110 million tons of coal in the Colombian concessions. In partnership with OGX, MPX also acquired a 70% interest in 7 onshore blocks in Parnaíba basin, inland Maranhão state, with huge natural gas exploration potential.

- In October a part of the R$700 million funding provided by BNDES to Pecém I was released. The Açu project was also awarded an installation license by INEA.

- In November the IDB released USD 260 million to Pecém I. That month IBAMA awarded the preliminary license to the MPX Sul project and 1.7 tcf of contingently sources were certified in the blocks acquired in Parnaíba basin. The volume certified in Parnaíba basin indicates sufficient potential to supply a 1000 MW gas-fired power plant.

- In December BNDES and BNB released long-term funding for Itaqui of R$315.5 million and R$99 million respectively.

3 Sector overview

The international financial crisis that emerged in 2008 rocked several sectors of the Brazilian economy. Its effects on the energy sector in 2009 were reflected by the sharp contraction in industrial segments, especially basic metallurgy. The steel sector, for example, was operating at half capacity most of the time.

However, residential and commercial electricity demand was bolstered by a number of economic measures, such as the cuts in excise tax (IPI) on vehicles and white and brown goods, which kept sales high. Electricity consumption in 2009 accordingly fell by 0.7% over 2008.

The weather conditions in 2009 were extremely favorable to the supply of electricity in the National Interconnected System (SIN). The ENA (natural affluent energy) registered at SE/CO, the energy submarket with the largest concentration of reservoirs in Brazil, was the seventh largest on record since 1931. Heavy rainfall and lower energy consumption meant reservoirs were at near capacity throughout the year.

As a result of these factors, spot energy prices (aka different settlement price) plummeted in 2009, especially after the end of the wet season (April).

The main events involving energy auctions in 2009 were the following:

A-3 Auction
11 MW was sold at energy auction A-3/2009 on December 27, supplied by two generation ventures: the Rio Bonito SHP (small hydroelectric power station), that sold an average 1 MW for a maximum price of R$ 144/MWh and UTE Codora, running on sugarcane biomass, that sold an average 10 MW at R$ 144.60/MWh. The initial price for thermal energy was R$ 146/MWh.

A-5 Auction
Scheduled for December 21, the auction was cancelled by MME due to its failure to obtain the preliminary environmental license for the concession to operate seven hydroelectric ventures, with the total installed capacity of 905 MW.

In addition to this setback, the demand for the distribution sector was found to be weak for 2014, meaning that the energy requirement could be met by the energy sold at Auction A-3 of 2011.

Reserve Auction
The first energy auction directed exclusively at wind energy was held on December 14 and resulted in the procurement of 71 projects located in five states in the North-East and southern regions of Brazil, with a total capacity of 1,805.7 megawatts. The average sale price of R$ 148.39/MWh represented a discount of 21.49% over the maximum price of R$ 189/MWh.

Another event of importance in the electric sector in 2009 was the simultaneous outage of three 750 kV circuits between the substations of Ivaiporã and Itaberá, shutting down the entire Itaipu power station and resulting in power cuts in 18 states lasting over 6 hours. The blackout was attributed to intense atmospheric discharges recorded in the vicinity of the Itaberá substation, with the heavy wind and rain compromising the effectiveness of its insulators.

4 Financial Statements

The financial statements hereby presented primarily reflect the implementation phase of the projects of the Company's subsidiaries, represented by investments, costs and expenses related to the ventures under development.

The Company grossed R$80.1 million in 2009, consisting of R$62.8 million from operating UTE Serra do Navio and R$17.3 million from MPX Comercializadora de Energia Ltda. The Company reported a loss of R$147.4 million, due to the book loss of R$200.2 million returned by the non-speculative hedges taken out. The Company stresses that this loss is simply the result of an accounting metric, and does not affect the company's cash situation, according to the hedge accounting method used for non-speculative hedges. Also note that the book loss is countered by a decrease in future expenditure and/or the local value of debts denominated in US dollars.

MPX's consolidated gross debt stood at R$1.6 billion at the end of 4QT09. The company reported consolidated cash of R$1.6 billion at the end of 2009.

5 Social and environmental responsibility

We believe that the only way to conduct our business consists of establishing three pillars of sustainability: economically feasible, environmentally sustainable and socially fair ventures. We accordingly make a point of contributing to the economic, social and environmental development of the communities we operate in.

The countless social and environmental initiatives implemented in 2009 include the conclusion of Vila Canaã, involving the building of 100 homes, a school and a community centre for the families relocated by MPX Itaqui and the commencement of work of the MPX Environmental and Social Council, which ratifies the Company's commitment to sustainable practices in its ventures. The Council consists of specialists invited to advise the company on Environment and Community Relations strategies and plans. The Council will provide advice on current and future mandatory and voluntary actions. We also point out the support given to the LIFE (Lasting Initiative For Earth) project, launched in July 2009, which created a groundbreaking certification instrument for acknowledging companies undertaking commitments and developing initiatives in favor of biodiversity and protecting the Earth's natural assets.

6 Capital market and corporate Governance

Since its flotation on December 13, 2007 MPX Energia has entered the new market of BM&FBovespa, reinforcing the Company's commitment to the best corporate governance practices.

The MPX Board of Directors elected at the meeting held April 28, 2009 consists of 9 members, including 3 independent members, with a term of 1 year, after which they may seek reelection.

MPX also has an Audit Committee, consisting of three members, which has been created to advise the Board of Directors on activities related to the monitoring of the accounting practices followed to prepare the Company and its subsidiaries' financial statements and the appointment of the independent auditors and evaluation of their performance. The committee answers to the Company's Board of Directors and is independent from the Executive Board.

MPX's stock is traded in the new market of BMF&Bovespa under code MPXE3, currently listed in the portfolios of the index of shares with special corporate governance (IGC), with a special Tag Along (ITAG) and the Brazil 100 index (IBrX-100).

The Company's share capital consists solely of common shares, consisting of 136,692,680 shares as of December 31, 2009, with a free float of 24.4%.

MPX's stock closed the final quarter of 2009 at R$22.50, compared with R$ 19.80 as of September 30, 2009, recording a gain of 13.6% in the period as compared to a gain of 11.5% by the Bovespa Index (Ibovespa) and 8.9% of the Electric Sector Index (IEE). In the year the MPXE3 share made a sharp recovery after the 2008 crisis, gaining 231.4% as compared to gains of 82.7% by Ibovespa and 59.1% by IEE. The Company closed the year with a market value of R$3.1 billion (approximately US$ 1.76 billion).

7 Arbitration clause

The Company, its shareholders, managers and members of the Board of Auditors undertake to settle through arbitration any and all dispute or controversy which may arise between them, especially those relating to or deriving from the enforcement, validity, effectiveness, interpretation, violation and effects of the provisions established in the new market participation agreement, the new market's trading regulations, the Bylaws, the shareholders' agreements filed at Company head office, Brazilian Corporation Law, the regulations issued by the National Monetary Council, the Brazilian Central Bank, the Brazilian Securities Commission (CVM) and the São Paulo Stock Exchange (BOVESPA), in addition to the other regulations applicable to the capital markets in general, arbitration clauses and the Arbitration Regulations of the Market Arbitration Chamber, conducted in accordance with the latter regulations.

8 Relations with the independent auditors

Pursuant to CVM Instruction 381/2003, we inform you that KPMG Auditores Independentes is retained specifically to examine our financial statements and provided no other services to the Company in the 2009 financial year.

9 Executive Board Statement

In accordance with the provisions of CVM Instruction 480/09, the officers of MPX hereby represent they have discussed, reviewed and accepted the opinions expressed in the independent auditors' report and the financial statements for the financial year ended December 31, 2009.

10 Acknowledgements

MPX Management wishes to thank our shareholders, the Federal, State and Municipal Governments, our partners and suppliers and the communities in the areas we are present in, as well as and, especially, our employees for their dedication, commitment, contributions and confidence throughout 2009, a year of substantial achievement for MPX.

Rio de Janeiro, March 8, 2010

Management.

KPMG Auditores Independentes
Av. Almirante Barroso, 52 - 4º
20031-000 - Rio de Janeiro, RJ - Brasil
Caixa Postal 2888
20001-970 - Rio de Janeiro, RJ - Brasil

Central Tel 55 (21) 3515-9400
Fax 55 (21) 3515-9000
Internet www.kpmg.com.br

Independent auditors' report

To
Board of Directors and Shareholders
MPX Energia S.A.
Rio de Janeiro - RJ

1. We have examined the accompanying balance sheets of MPX Energia S.A. ("Company") and the consolidated balance sheets of the Company and its subsidiaries as of December 31, 2009 and 2008, and the related statements of operations, changes in shareholders' equity, cash flows and added value for the years then ended, which are the responsibility of its management. Our responsibility is to express an opinion on these financial statements.

2. Our examinations were conducted in accordance with auditing standards generally accepted in Brazil and included: (a) planning of the audit work, considering the materiality of the balances, the volume of transactions and the accounting systems and internal controls of the Company and its subsidiaries; (b) verification, on a test basis, of the evidence and records which support the amounts and accounting information disclosed; and (c) evaluation of the most significant accounting policies and estimates adopted by Company's and subsidiaries' management, as well as the presentation of the financial statements taken as a whole.

3. In our opinion, the aforementioned financial statements present fairly, in all material respects, the financial position of MPX Energia S.A. and the consolidated financial position of this Company and its subsidiaries as of December 31, 2009 and 2008, the results of its operations, changes in its shareholders' equity, its cash flows and its added value in the operations for the years then ended, in conformity with accounting practices adopted in Brazil.

KPMG Auditores Independentes, uma sociedade simples brasileira e firma-membro da rede KPMG de firmas-membro independentes e afiliadas à KPMG International Cooperative ("KPMG International"), uma entidade suíça.

KPMG Auditores Independentes, a Brazilian entity and a member firm of the KPMG network of independent member firms affiliated with KPMG International Cooperative ("KPMG International"), a Swiss entity.

4. The financial statements have been prepared assuming that the Company and its subsidiaries will continue as a going concern. As stated in Note 10, the subsidiaries Porto do Pecém Geração de Energia S.A., MPX Pecém II Geração de Energia S.A., UTE Porto do Itaqui Geração de Energia Ltda., UTE Porto do Açu Energia S.A., Seival Sul Mineração Ltda., UTE MPX Sul Energia Ltda., MPX Energia de Chile Ltda., MPX Áustria GmbH, MPX Viena GmbH, MPX Colombia S.A., MPX Tauá Energia Solar Ltda., Porto do Pecém Transportadora de Minérios S.A., MPX Comercializadora de Combustíveis Ltda., Termopantanal Participações Ltda. and Termopantanal Ltda. are in a pré-operating stage.. The recoverability of the amounts recorded as Property, plant and equipment, Intangible assets and Deferred charges depends on the success of the future operations of the Company and its subsidiaries, as well as, subsidiaries are dependent upon the financial support of shareholders and/or capital infusions from third-parties up to the moment their operations are profitable. The lack of the aforementioned financial resources will raise substantial doubt about the Company's and its subsidiaries' ability to continue as a going concern. Management's plans in regard to these operational activities are also described in Note 10.

Rio de Janeiro, March 8, 2010

KPMG Auditores Independentes
CRC SP-014428/O-6 F-RJ

Manuel Fernandes Rodrigues de Sousa
Accountant CRC RJ-052428/O-2

MPX Energia S.A.
(A publicly held company)

Balance sheets

December 31, 2009 and 2008

(In thousands of Reais)

		Parent Company		Consolidated	
Assets	**Note**	**2009**	**2008**	**2009**	**2008**
Current					
Cash and cash equivalents	6	913,023	1,640,801	1,638,733	1,858,792
Trade accounts receivable	7	-	-	6,295	8,576
Subsidies receivable - Fuel Consumption Account	7	-	-	5,445	5,878
Inventories		-	-	2,610	1,238
Prepaid expenses	8	231	-	5,100	5,395
Gain on derivative financial instruments transactions	17	-	59,305	6,434	85,704
Recoverable tax	9	71,517	56,156	80,070	61,554
Advances to suppliers		146	105	680	1,123
Advances to employees		247	134	291	154
Other accounts receivable		18	19	3,560	598
		985,182	1,756,520	1,749,218	2,029,012
Noncurrent					
Noncurrent assets					
Related-party transactions	14	35,154	27,107	1,584	-
Subsidies receivable - Fuel Consumption Account	7	-	-	24,617	-
Recoverable tax	9	22	-	11,480	-
Deferred taxes	9	12,382	-	166,006	-
Prepaid expenses	8	-	-	4,182	7,276
Gain on derivative financial instruments transactions	17	53,611	34,701	179,356	175,037
Other accounts receivable		4,178	-	4,289	-
		105,347	61,808	391,514	182,313
Investment	10	905,967	360,260	560	280
Property, plant and equipment	11	25,365	3,221	1,988,668	1,140,641
Intangible assets	12	15,935	15,681	40,885	21,111
Deferred charges	13	1,155	2,753	48,461	83,565
		2,038,951	2,200,243	4,219,306	3,456,922

		Parent Company		Consolidated	
Liabilities	**Note**	**2009**	**2008**	**2009**	**2008**
Current					
Loans and financing	15	-	-	589,889	882,907
Suppliers		3,135	1,814	34,006	34,238
Taxes and contributions payable	16	27,925	36,609	32,491	37,840
Provisions and payroll charges		8,207	4,454	15,680	5,685
Provisions for losses under derivative transactions	17	-	-	62,359	16,469
Related-party transactions	14	1,700	1,757	1,966	2,173
Contractual retentions	11	-	-	210,646	110,843
Advances		-	-	-	14,137
Minimum mandatory dividends		-	48,468	-	48,468
Other liabilities		659	2,959	5,375	3,636
		41,626	96,061	952,412	1,156,396
Noncurrent					
Loans and financing	15	-	-	959,482	-
Provisions for losses under derivative transactions	17	60,925	-	300,599	149,502
Related-party transactions	14	2	2	-	-
Provision for unsecured liabilities	10	29,038	-	-	-
Deferred taxes	9	-	-	60,145	-
Provision for devaluation of investments	10	-	8,332	-	8,332
		89,965	8,334	1,320,226	157,834
Interest of non-controlling shareholders		-	-	39,308	46,844
Shareholders' equity	19				
Capital		2,041,918	2,041,695	2,041,918	2,041,695
Capital reserves		6,122	4,027	6,122	4,027
Legal reserve		-	10,205	-	10,205
Investment reserves		-	36,962	-	36,962
Equity valuation adjustments		(31,763)	-	(31,763)	-
Accumulated translation adjustments		(8,692)	2,959	(8,692)	2,959
Accumulated losses		(100,225)	-	(100,225)	-
		1,907,360	2,095,848	1,907,360	2,095,848
		2,038,951	2,200,243	4,219,306	3,456,922

See the accompanying notes to the financial statements.

MPX Energia S.A.
(A publicly held company)

Statements of operations

Years ended December 31, 2009 and 2008

(In thousands of Reais)

		Parent Company		Consolidated	
	Note 2009		2008	2009	2008
Revenues					
Electricity sales to distributors		-	-	62,836	6,065
Electricity trading		-	-	17,233	2,866
Deductions					
Income and social contributions on revenue		-	-	(16,158)	(826)
Net operating revenue		-	-	63,911	8,105
Cost of the electricity service:					
Personnel and management		-	-	(735)	(902)
Consumables (net of CCC subsidy)		-	-	(43,042)	(1,989)
Electricity purchased for resale		-	-	(15,007)	(2,810)
Outsourced services		-	-	(27)	(1,004)
Depreciation and amortization		-	-	-	(1,339)
Gross profit		-	-	5,100	61
Operating income (expenses):					
Personnel and management		(34,198)	(25,389)	(59,231)	(25,389)
Outsourced services		(33,589)	(26,222)	(90,696)	(26,222)
Depreciation and amortization		(524)	(442)	(6,457)	(442)
Materials		(4,100)	(270)	(405)	(270)
Provision for unsecured liabilities		(37,239)	-	-	-
Provision for devaluation of investments		12,509	(8,332)	12,509	(8,332)
Provision for impairment		-	-	(18,269)	-
Financial expenses	21	(80,109)	(4,838)	(657,494)	(5,630)
Financial income	21	167,678	315,978	611,039	317,221
Equity in net income of subsidiaries	10	(118,586)	160	-	-
Other operating expenses	22	(3,869)	(8,344)	(11,292)	(8,436)
Profit (loss) before income and social contribution taxes		(132,027)	242,301	(215,196)	242,561
Current income and social contribution taxes		(27,747)	(38,223)	(30,063)	(38,432)
Deferred income and social contribution taxes		12,382	-	89,499	-
Net income (loss) before interest of non-controlling shareholders		(147,392)	204,078	(155,760)	204,129
Interest of non-controlling shareholders		-	-	8,368	(51)
Net income (loss) for the year		(147,392)	204,078	(147,392)	204,078
Net income (loss) per lot of a thousand shares - R$		(1.08)	30		
Number of shares at year-end		136,692,680	6,831,114		

See the accompanying notes to the financial statements

MPX Energia S.A.
(A publicly held company)

Statements of changes in shareholders' equity

Years ended December 31, 2009 and 2008

(In thousands of Reais)

			Profit reserves					
	Capital	**Capital Reserve**	**Legal**	**Profit retention reserve**	**Equity valuation adjustment**	**Accumulated translation adjustments**	**Accumulated losses**	**Total**
Balances at December 31, 2007	1,926,945	-	-	-	-	-	(108,084)	1,818,861
Adjustment under initial adoption of Law 11638/07 and Provisional Measure 449/08	-	359	-	-	-	-	(359)	-
Capital increase (Public share offering)	119,045	-	-	-	-	-	-	119,045
Stock issuance cost (Public share offering)	(4,295)	-	-	-	-	-	-	(4,295)
Increase of capital reserve through stock option plan	-	3,668	-	-	-	-	-	3,668
Exchange variance on overseas investment	-	-	-	-	-	2,959	-	2,959
Net income for the year	-	-	-	-	-	-	204,078	204,078
Allocations:								
Legal reserve	-	-	10,205	-	-	-	(10,205)	-
Investment reserve	-	-	-	36,962	-	-	(36,962)	-
Dividends	-	-	-	-	-	-	(48,468)	(48,468)
Balances at December 31, 2008	2,041,695	4,027	10,205	36,962	-	2,959	-	2,095,848
Adjustments to securities	-	-	-	-	(31,763)	-	-	(31,763)
Accumulated translation adjustments	-	-	-	-	-	(11,651)	-	(11,651)
Capital increase	223	-	-	-	-	-	-	223
Stock options granted and recognized	-	2,095	-	-	-	-	-	2,095
Loss for the year	-	-	-	-	-	-	(147,392)	(147,392)
Absorption of accumulated losses	-	-	(10,205)	(36,962)	-	-	47,167	-
Balances at December 31, 2009	2,041,918	6,122	-	-	(31,763)	(8,692)	(100,225)	1,907,360

See the accompanying notes to the financial statements.

MPX Energia S.A.
(A publicly held company)

Statements of cash flows

Years ended December 31, 2009 and 2008

(In thousands of Reais)

	Parent Company		Consolidated	
	2009	**2008**	**2009**	**2008**
Cash flows from operating activities				
Net income (loss) for the year	(147,392)	204,078	(147,392)	204,078
Adjustments for:				
Depreciation and amortization	525	442	6,457	442
Amortization of deferred charges	1,598	754	33,608	12,634
Equity in net income of subsidiaries	118,586	(160)	-	-
Unrealized derivative operations	101,320	(94,006)	271,938	(94,006)
Adjustment for exchange devaluation	(11,651)	-	(11,651)	-
Stock options awarded	2,095	-	2,095	-
Investment devaluation	(8,332)	-	(8,332)	-
Provision for impairment	-	-	11,394	-
Provision for unsecured liabilities	29,038	-	-	-
	85,787	111,108	158,117	123,148
Changes in assets and liabilities:				
(Increase) decrease in accounts receivable	-	-	2,281	(14,454)
Increase in inventories	-	-	(1,372)	(1,238)
Increase (decrease) in advances to suppliers	(41)	(115)	(13,694)	(1,670)
Increase (decrease) in advances to employees	(113)	-	(137)	-
Increase (decrease) in other receivables	(4,177)	-	(7,251)	-
Increase (decrease) in prepaid expenses	(231)	-	3,389	(12,671)
Increase in recoverable taxes	(15,383)	(56,020)	(29,996)	(61,410)
Increase in deferred tax assets	(12,382)	-	(166,006)	-
Increase in CCC Incentive	-	-	(24,184)	-
Increase (decrease) in trade payables	1,321	191	(232)	31,075
Increase (decrease) in accounts payable and provisions	1,454	4,475	11,734	17,892
Increase (decrease) in related parties	(59)	1,759	(1,791)	976
Increase (decrease) in taxes and contributions	(8,684)	33,267	(5,349)	34,428
Increase (decrease) in contractual retentions	-	-	99,803	-
Increase (decrease) in deferred tax liability	-	-	60,145	-
Decrease in derivative transactions	-	-	-	(82,850)
Equity appraisal adjustments	(31,763)	-	(31,763)	-
	(70,058)	(16,443)	(104,423)	(89,922)
Net cash provided (used) in operating activities	15,729	94,665	53,694	33,226
Cash flows from investment activities				
Acquisition of PPE and intangible assets	(22,922)	(15,709)	(884,156)	(946,578)
Acquisition of investments	(664,293)	(254,132)	(280)	11,552
Acquisition of deferred assets	-	(3,394)	-	-
Minority interests	-	-	(7,536)	42,608
Settlement of derivative transactions	-	-	-	171
Net cash used in investments	(687,215)	(273,235)	(891,972)	(892,247)
Cash flows from financing activities				
Loans and financing paid/obtained	-	(163,184)	666,464	719,723
Capital subscription	223	121,377	223	121,377
Payment of dividends and interest on shareholders' equity	(48,468)	-	(48,468)	-
Loan payments - related parties	(8,047)	28,898	-	10,872
Net cash provided (used) in financing activities	(56,292)	(12,909)	618,219	851,972
Decrease in cash and cash equivalents	(727,778)	(191,479)	(220,059)	(7,049)
Increase (decrease) in cash and cash equivalents				
At beginning of year	1,640,801	1,832,280	1,858,792	1,865,841
At end of year	913,023	1,640,801	1,638,733	1,858,792
	(727,778)	(191,479)	(220,059)	(7,049)

See the accompanying notes to the financial statements.

MPX Energia S.A.
(A publicly held company)

Statements of added value

Years ended December 31, 2009 and 2008

(In thousands of Reais)

	Parent Company		Consolidated	
	2009	**2008**	**2009**	**2008**
Revenue				
Gross revenue	-	-	80,069	8,931
Revenue relating to construction of company assets	-	-	813,466	1,028,874
	-	-	893,535	1,037,805
Consumables acquired from third parties (including ICMS and IPI)				
Material, energy, outsourced services and other operating expenses	37,649	45,381	135,803	131,216
Gross added value	(37,649)	(45,381)	757,732	906,589
Depreciation and amortization	526	442	6,457	1,779
Net added value	(38,175)	(45,823)	751,275	904,810
Transferred added value				
Financial income	149,128	315,978	258,747	444,916
Gains in derivative operations	21,651	-	352,924	-
Provision for unsecured liabilities	(37,239)	-	(18,901)	-
Provision for investment losses	12,509	-	-	-
Equity in net income of subsidiaries and associated companies	(118,586)	160	-	-
	27,463	316,138	592,770	444,916
Total added value to be distributed	(10,712)	270,315	1,344,045	1,349,726
Distribution of added value				
Employees:				
Direct remuneration	22,454	13,696	42,495	23,857
Benefits	4,855	7,177	6,277	7,291
FGTS and Contributions	6,412	847	10,707	869
Third-party remuneration	477	3,668	487	-
Taxes:				
Federal	15,365	36,011	(55,539)	41,728
State	175	-	12,970	-
Interest expenses:				
Interest on loans	3,451	4,838	604	46,535
Losses on derivative transactions	79,759	-	599,722	17,423
Advances to suppliers	-	-	848,999	871,367
Leasing and rent	3,330	-	8,269	-
Insurance	402	-	2,644	-
Exchange variance	-	-	21,635	72,105
Studies and projects	-	-	542	64,421
Minority interests	-	-	(8,375)	52
Interest earnings:				
Retained earnings (losses) for the year	(147,392)	204,078	(147,392)	204,078
Added value distributed	(10,712)	270,315	1,344,045	1,349,726

See the accompanying notes to the financial statements.

MPX Energia S.A.

Notes to the financial statements

December 31, 2009 and 2008

(In thousands of Reais, unless as stated otherwise)

1 Operations

MPX Energia S.A. ("Company") was founded on April 25, 2001 and is headquartered in Rio de Janeiro. On November 05, 2007 the Company changed its name to its current name.

Its core activity is the generation of electricity through the development of a diversified portfolio of projects, including thermal power plants, which will be strategically located in ports and super ports in Brazil and Chile, in addition to renewable energy projects, such as solar energy. In order to integrate its operations it is also implementing coalmining projects in Colombia to supply its power stations.

The company participates in these projects as a quotaholder or shareholder of the companies that implement these projects and certain projects will be implemented in partnership with other players in the energy sector. These projects will mainly be funded through financing and funds obtained by the Company through the public share offering of MPX Energia S.A. made on December 14, 2007 and January 11, 2008 (supplementary batch), amounting to R$2,035,410.

As of December 31, 2009 MPX Energia S.A. has equity interests (direct and indirect) in the following subsidiaries and the joint subsidiary Porto do Pecém Geração de Energia S.A, which except for Amapari Energia S.A. and MPX Comercializadora de Energia Ltda. are preoperational. For further details about the subsidiaries see Note 10.

MPX Energia S.A.

Notes to the financial statements

(In thousands of reais, unless stated otherwise)

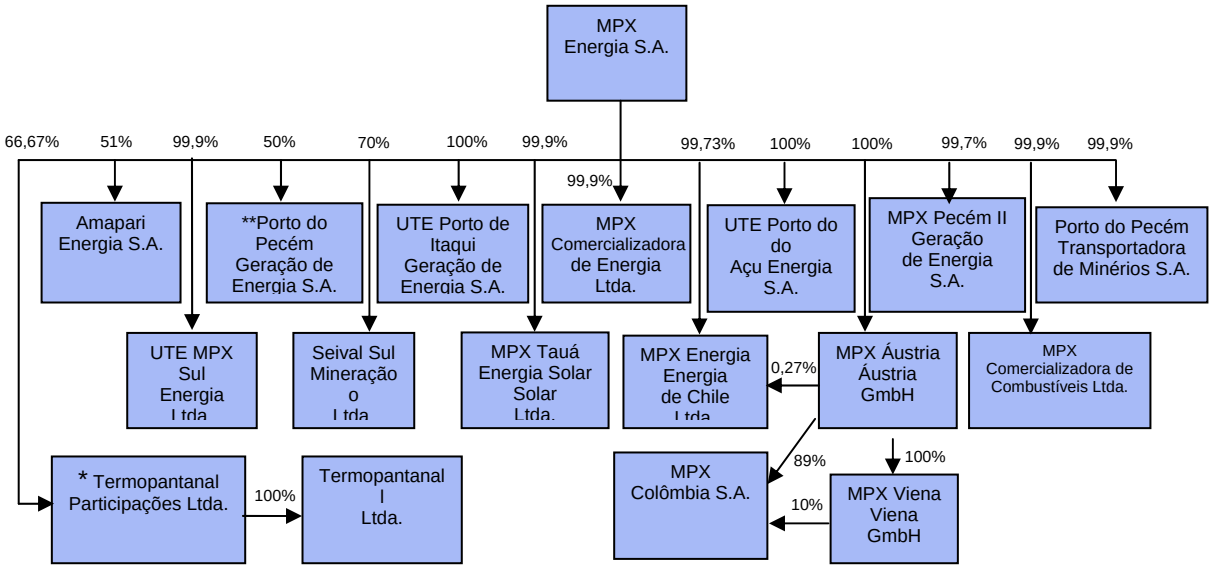

* On September 30, 2008 MPX Energia S.A. recorded a provision for devaluation of its 66.67% interest in Termopantanal Participações Ltda. (see Note 10n). This provision has been recorded under non-current liabilities. A provision was made for the impairment of property, plant and equipment and deferred assets on December 31, 2009 and recorded at Termopantanal Ltda.

** Joint subsidiary.

2 Licenses and Permits

MPX Group's is committed to obtaining all the licenses and permits required by law for each of its facilities and activities. By way of its subsidiaries, the Company has the following licenses and permits as of December 31, 2009:

Company	Type		Date Issued	Expiry date
Porto do Pecém Geração de Energia S.A.	Installation Permit 114/2009	**(a)**	09/11/2009	2 years
MPX Pecém II Geração de Energia S.A.	Installation Permit 116/2009	**(b)**	09/28/2009	2 years
Amapari Energia S.A.	ANEEL Permit 1369/2008	**(c)**	05/20/2008	29 years
Amapari Energia S.A.	SFG Order 2,197/2008	**(d)**	06/09/2008	Indefinite
Amapari Energia S.A.	SFG Order 4143/2008	**(e)**	11/07/2008	Indefinite
Amapari Energia S.A.	Operating Permit 106/2009	**(f)**	07/03/2009	2 years
UTE Porto do Açu Energia S.A.	Preliminary Environmental License FE014522/2008	**(g)**	07/30/2008	2 years
UTE Porto do Itaqui Geração de Energia S.A.	Preliminary Environmental License 293/2008	**(h)**	11/03/2008	2 years
UTE Porto do Itaqui Geração de Energia S.A.	Installation Permit 584/2009	**(i)**	01/29/2009	4 years
UTE Porto do Itaqui Geração de Energia S.A.	Installation Permit 601/2009	**(j)**	03/18/2009	6 years
UTE Porto do Itaqui Geração de Energia S.A.	Deforestation Permit 332/2009	**(k)**	03/18/2009	1 year
MPX Comercializadora de Energia Ltda.	ANEEL Order 747/2008	**(l)**	02/25/2008	Indefinite
MPX Energia S.A.	Preliminary License 61/2009 - COPAM	**(m)**	03/30/2009	1 year
Seival Sul Mineração Ltda.	Operating Permit 7764/2009	**(n)**	10/21/2009	4 years
UTE Porto do Açu Energia S.A	Installation Permit IN0882	**(o)**	10/14/2009	3 years
UTE Porto do Itaqui Geração de Energia S.A	Installation Permit 672/2009	**(p)**	12/23/2009	4 years
MPX Energia S.A	Preliminary License 247/2009	**(q)**	10/16/2009	1 year
MPX Energia S.A	Preliminary License 332/2009	**(r)**	11/11/2009	2 years

(a) Renewal of Installation Permit 98/2008 for a 720-MW thermal power plant at Complexo Industrial e Portuário do Pecém - CIPP in São Gonçalo do Amarante, Ceará state. This permit was renewed on September 11, 2009 for 2 years.

(b) Renewal of Installation Permit 483/2008 for an additional 360 MW at CIPP in São Gonçalo do Amarante, Ceará state. This permit was renewed on September 28, 2009 for 2 years.

(c) Authorization to operate as an Independent Energy Producer.

(d) Authorization to commence the energy generation testing phase on June 10, 2008.

(e) Authorization for commercial start-up on November 08, 2008.

(f) Renewal of operating permit 99/2008 submitted on September 30, 2008 to the State Environmental Protection Agency – FEPAM. The permit was renewed on July 03, 2009 for 2 years.

(g) Environmental permit to install a 2100-MW thermal power plant in São João da Barra, Rio de Janeiro state.

(h) Environmental permit to install a 360-MW thermal power plant in Sector G of the DISAL Industrial Estate, in São Luís, Maranhão state.

(i) Installation permit for a landscaping works and services site to build a 360 MW thermal power plant in DISAL, in São Luís, Maranhão state.

(j) Installation permit to install a 360 MW thermal power plant in DISAL, in São Luís, Maranhão state.

(k) Authorization to conduct the required deforestation in the total landscaping area of the power station venture to be installed in DISAL, in São Luís, Maranhão state.

(l) Authorization to operate as an energy trader at the Electricity Trading Chamber – CCEE.

(m) Permit based on technical report 1250/2009 referring to the project to implement the 5 MW Tauá photovoltaic solar energy generation plant in the municipality of Tauá, Ceará state.

(n) Renewal of operating permit 1672/2005 awarded on October 21, 2009 by the State Environmental Protection Agency – FEPAM of Rio Grande do Sul state for a term of 4 years.

(o) Three-year installation license awarded by the State Environmental Department (INEA), authorizing the implementation of a 2100 MW electricity production plant consisting of four 525 MW turbines.

(p) Installation permit for a 230 kV, 15.74 km transmission line, connecting the UTE to the São Luis II substation of ELETRONORTE.

(q) Preliminary permit based on technical report 3670/2009 - COPAM/NUCAM, referring to the project to implement a wind farm with a nominal capacity of 34.5 MW

(r) Preliminary permit awarded by IBAMA for the 600 MW Usina Termelétrica MPX Sul venture consisting of two 30 MW generators.

3 Presentation of the financial statements

The individual and consolidated financial statements were prepared in accordance with accounting practices adopted in Brazil, comprising the Brazilian Corporation Law, the Pronouncements, Instructions and Interpretations issued by the Accounting Pronouncement Committee ("CPC"), the regulations established by the National Electricity Regulatory Agency ("ANEEL") according to the Accounting Guidelines of the Public Electricity Service, and in compliance with the accounting principles introduced by Laws 11638/07 and 11941/09 and the standards established by Brazilian Securities Commission ("CVM").

The Notes to the financial statements include information regarding projected investments and estimates of installed capacity and mining production capacity, which is not part of the scope of the audit on the financial statements and has therefore not been audited by KPMG Auditores Independentes.

On March 8, 2010 the Board of Directors of the Company authorized the conclusion and disclosure of the financial statements for the year ended December 31, 2009.

4 Description of significant accounting policies

a. Statement of operations

Income and expenses are recognized on the accrual basis. With the exception of MPX Energia S.A., Amapari Energia S.A. and MPX Comercializadora de Energia Ltda., the subsidiaries are preoperational.

b. Foreign currency

The Company's Management determined that its functional currency is the Brazilian Real, in accordance with the rules established in CPC 02 – Effects of the Changes in Exchange Rates and Translation of Financial Statements, approved by CVM Resolution 534 of January 29, 2008. Monetary assets and liabilities denominated in foreign currencies were translated into reais at the foreign exchange rate ruling at the balance sheet date.

Transactions in foreign currency, i.e. all transactions that are not carried out in the functional currency, are translated at the exchange rate on the dates of each transaction. Monetary assets and liabilities in foreign currency are translated into the functional currency at the exchange rate on the closing date. The gains and losses from the changes in the exchange rates on the monetary assets and liabilities are recognized in the statement of income. Non-monetary assets and liabilities acquired or contracted in foreign currency and translated based on the exchange rates on the dates of the transactions or on the dates of valuation at fair value, when this is used. The gains and losses arising from variations in investments abroad are recognized directly in shareholders' equity under equity valuation adjustments and recognized in the statement of income when these investments are fully or partially sold. The financial statements of subsidiaries and associated companies abroad are adjusted to accounting practices in Brazil and, subsequently, translated to the local functional currency at the exchange rate on the closing date.

c. Accounting estimates

The preparation of the financial statements in accordance with accounting practices adopted in Brazil requires that the Company's Management uses its judgment in determining and recording accounting estimates. Significant assets and liabilities subject to these estimates and assumptions include the residual value of property, plant and equipment, deferred charges, provision for impairment charges, provision for unsecured liabilities, stock options awarded, deferred tax assets and the valuation of financial instruments. The settlement of transactions involving these estimates may result in a different amount due to the lack of precision inherent to the process of their determination. The Company reviews the estimates and assumptions at least once a quarter.

d. Financial instruments

Non-derivative financial instruments include short-term investments, receivables, cash and cash equivalents, loans and financing as well as accounts payable and other debts. They are initially stated at their fair value plus any directly attributable transaction costs, in the case of instruments that are not stated at their fair value in the income statement. Following initial recognition, MPX Energia S.A. and its subsidiaries appraise their financial instruments as follows:

- *Held to maturity financial instruments*

  If the Company intends to and is able to hold its debt instruments to maturity, they are classified as held-to-maturity. Held-to-maturity investments are appraised at the amortized cost using the effective interest rate method, minus any reductions to their recoverable value. MPX Energia S.A. and its subsidiaries do not have any financial securities of this category.

- *Available for sale financial instruments*

  The Company's investments in equity instruments and certain assets related to debt instruments are classified as available for sale. Following initial recognition, they are valued at fair value including variance and excluding reductions to their recoverable value. Foreign currency differences presented by these instruments are recognized directly in the shareholders' equity, net of tax effects. When an investment is redeemed or sold, the accumulated gain or loss in shareholders' equity is transferred to income. MPX Energia S.A. and its subsidiaries do not have any financial securities of this category.

- *Financial instruments at fair value through profit or loss*

  Financial instruments are designated at their fair value through the income statement if the Company manages these investments and takes purchase and sale decisions based on their fair value according to the risk management and investment strategy documented by the Company. After initial recognition, attributable transaction costs are recognized in the income statement as and when incurred. Financial instruments at fair value through profit or loss are stated at fair value, and their fluctuations are recognized in income/expenses. The financial investments of MPX Energia S.A. and its subsidiaries are classified in this category.

- *Loans and receivables*

  Loans and receivables should be stated at their amortized cost through the use of the effective interest rate method, less possible decreases in the recoverable value.

- *Financial derivative instruments and hedge accounting*

  Financial derivative instruments are recognized at their fair value on the trade date. The fair value of the financial derivative instruments is subsequently revalued on a regular basis, and any gains and losses resulting from this revaluation are recorded in the income statements for the period, except for those referring to cash flow derivatives, as mentioned below.

  Hedge accounting

  The Company and its subsidiaries use financial instruments to cover risks posed by interest rates, exchange variance and financing loans. Derivatives not classified as cash flow coverage are recorded as trade derivatives.

  Cash flow coverage derivatives are recorded at fair value and any gains or losses are recognized according to the hedge accounting model used, as follows:

  i) Formal coverage documentation must exist at the date the relationship commenced

  ii) The coverage is expected to be highly effective

  iii) The effectiveness of the coverage can be reliably measured

  iv) The coverage is evaluated on a continual basis and determined as being highly effective throughout the financing period, and

  v) The coverage for a projected transaction must be highly probable and present exposure to cash flow variations that could ultimately affect the income statement.

Cash flow coverage

The effective part of the changes in the fair value of the designated derivatives classified as cash flow coverage are recognized in shareholders' equity - equity valuation adjustment. The gains or losses of the ineffective portion of the coverage are recognized and charged to the income statement for the period when they become ineffective.

The amounts accumulated in shareholders' equity are recorded through profit and loss in periods when the covered item affects the profit and loss. However, when the projected transaction that has been covered results in the recognition of a non-financial asset and liability, the gains or losses recorded in shareholders' equity are charged to the initial cost of the asset or liability.

Upon the expiry or disposal of a coverage instrument or when the coverage instrument no longer meets the hedge accounting criteria, any accumulated gain or loss recorded in shareholders' equity at that date is maintained in shareholders' equity until the projected transaction has been recognized in the income statement. When the transaction is no longer expected to occur, the accumulated gains or losses charged to shareholders' equity are recognized immediately in the income statement for the period.

Effectiveness

Classification of a coverage instrument is subject to it being shown to be effective. The Company and its subsidiaries therefore conduct prospective tests at the start of the coverage instrument and at each reporting date prospective and retroactive tests are conducted to demonstrate its effectiveness and to show that the changes in the fair value of the covered item are offset by changes in the fair value of the coverage instrument, in respect of the covered risk. Any ineffectiveness determined is recorded in the income statement upon occurrence.

e. Current and noncurrent assets

- *Cash and cash equivalents*

  These are represented by highly liquid short-term investments that are promptly convertible into funds, maturing in up to three months after the acquisition date.

- *Accounts receivable*

  Trade accounts receivable are recorded at the amount billed, including the respective taxes. No allowance for doubtful accounts has been recorded because management does not expect to incur material losses in its trade receivables.

- *Inventories*

  Refers to acquisitions of diesel oil and lubricant oil used in the generation of electricity. Inventories are stated at the average acquisition cost, minus the provision for market devaluation when applicable.

- *Investment*

  Investments in subsidiaries, jointly controlled subsidiaries and associated companies where there is an interest in the voting capital of more than 20% or where there is significant influence and in other companies that are part of the same group or which are under common control are valued using the equity method of accounting.

  Exchange variance on overseas investments is recognized in the accumulated translation adjustments in the shareholders' equity.

- *Property, plant and equipment*

  Property, plant and equipment are recorded at the cost of acquisition, formation or construction (including interest, exchange variance and other capitalized financial charges). Asset depreciation is calculated from start-up at the straight line method based on the rates determined by ANEEL Resolution 367 issued June 02, 2009 by the National Electric Energy Agency - ANEEL, which takes into account the estimated useful life of the assets and residual values.

- *Intangible assets*

  Intangible assets refer to assets acquired from third parties recorded at total acquisition cost net of the respective amortization expenses. The goodwill resulting from expected future profitability is not amortized and its recovery value is tested annually.

- *Deferred charges*

  Refers to expenses incurred during the pre-operational phase related to payroll, services, taxes, financial income and others (see Note 13). Management opted to maintain the balance existing on December 31, 2008 for MPX Energia S.A. and its subsidiaries, in consideration of the provisions of Circular-Letter CVM/SNC/SEP no. 01/2009, which despite this sub-group's elimination allows the existence of non-amortized balances in this sub-group until their total amortization as of commissioning.

  The subsidiary Amapari Energia S.A. began amortizing its deferred charges in November 2008 (date of commissioning) over the term of 7 years.

- *Reduction to recoverable value*

  The recoverable value of property, plant and equipment, intangible assets and deferred charges is tested at least annually if there are indications of loss in value. The recoverable value of goodwill recorded in business combinations based on expected future profits is tested annually regardless of whether there are signs of devaluation.

  MPX Energia S.A. and its subsidiaries did not detect any signs of devaluation in the recoverable value of their assets..

f. Current and noncurrent liabilities

- *Loans and financing*

  Initially stated at their fair value minus the transaction costs directly attributable to them and subsequently at the amortized costs using the effective interest rate method.

- *Provisions*

  A provision is recognized in the balance sheet when the Company has a legal or constructive obligation as a result of a past event, and it is probable that an outflow of economic benefits will be required to settle the obligation. Provisions are recorded utilizing the best estimates of the risk involved. As of December 31, 2009 and 2008 MPX Energia S.A. and its subsidiaries did not have any contingencies requiring a provision.

- *Income and social contribution taxes*

  The income and social contribution taxes are calculated based on the rates of 15% plus a surcharge of 10% on taxable income in excess of R$ 240 thousand for income tax and 9% on taxable income for social contribution on net income. Tax loss carryforwards and the negative base of social contribution were offset, limited to 30% of the taxable income before this offsetting. Deferred income and social contribution taxes reflect future tax effects attributable to temporary differences between the tax bases of assets and liabilities and their carrying values.

- *Stock-based payments*

  The effects of the share-based remuneration plan are calculated based on the fair value and recognized in the balance sheets and statement of operations as the contractual conditions are met.

- *Other current and noncurrent liabilities*

  Stated at the known amounts or estimated, plus, when applicable, the corresponding charges and/or monetary and exchange variations incurred up to the balance sheet date.

g. Income (loss) per share

The profit (loss) per share is calculated with a based on the total number of shares on the date of the balance sheets.

5 Consolidated financial statements

The consolidated financial statements were prepared in accordance with consolidation principles in accordance with CVM Instruction 247/96, and include the financial statements of the parent company and its subsidiaries.

Description of main consolidation procedures

- Elimination of asset and liability account balances between MPX Energia S.A. and its subsidiaries and between the latter;

- Elimination of the balances of investments and corresponding interests in the capital and accumulated profits/(losses) of subsidiaries;

- Identification of Interest of non-controlling shareholders;

- Identification of the Interest of non-controlling shareholders (referring to the 49% interest of Centrais Elétricas do Norte do Brasil S.A. - Eletronorte in Amapari Energia S.A.); and

- Elimination of revenue and expense balances between MPX Energia S.A. and its subsidiaries and between the latter. These balances are eliminated against the respective investments according to the parent company's interest in the subsidiaries.

The interest in the joint subsidiary Porto do Pecém Geração de Energia S.A. is valued by the equity method in the parent company's individual financial statements and consolidated proportionately in the consolidated financial statements.

Furthermore, pursuant to CVM Instruction 409/08 the consolidated financial statements includes balances and transactions of the exclusive investment fund "FI Multim Crédito Privado MPX 63", administrated by Itaú S.A., as per Note 6.

The accounting policies have been consistently applied in all the consolidated companies and are consistent with those used in the previous year.

The balances of the main consolidated account groups as of December 31, 2009 and 2008 are:

		2009								
Subsidiary (direct and indirect):		**Current assets**	**Noncurrent assets**	**Investment**	**PP&E and intangible assets**	**Deferred charges**	**Current liabilities**	**Noncurrent liabilities**	**Shareholders' equity**	**Net income (loss) for the year**
Porto do Pecém Geração de Energia S.A.	**(a)**	256,810	43,051	-	673,720	126	94,310	621,707	257,690	35,656
MPX Pecém II Geração de Energia S.A.		8,608	25,965	-	456,660	4	396,737	27,848	66,652	(35,541)
UTE Porto do Itaqui Geração de Energia S.A.	**(b)**	439,032	43,820	-	741,095	1,228	397,161	548,211	279,803	(73,197)
Amapari Energia S.A.		15,884	24,620	-	73,695	8,666	13,504	27,931	81,430	(3,106)
UTE Porto do Açu Energia S.A.		12,441	2,415	-	20,757	14,628	1,063	-	49,178	(2,022)
Seival Sul Mineração Ltda.		120	-	-	128	4,046	59	-	4,235	(1,495)
UTE MPX Sul Energia Ltda.		408	11	-	6,259	640	1,366	4,190	1,762	(3,814)
MPX Comercializadora de Energia Ltda.		12,480	1,586	-	3	-	3,043	-	11,026	545
MPX Energia de Chile Ltda.		6,329	1,584	-	479	6,541	2,403	-	12,530	(5,040)
MPX Áustria GmbH		-	-	34,338	-	57	-	-	34,395	(32,014)
MPX Colômbia S.A.		8,891	-	-	15,361	11,370	1,681	-	33,941	(34,596)
MPX Viena GmbH		44	-	3,629	-	-	-	-	3,673	(3,201)
MPX Tauá Energia Solar Ltda.		244	1	-	63	-	1	-	307	(44)
Porto do Pecém Transportadora de Minérios S.A.		-	-	-	-	-	-	-	-	-
MPX Comercializadora de Combustíveis Ltda.		2,730	136,031	-	34	-	29	163,652	(24,886)	(25,051)
Termopantanal Participações Ltda.	**(c)**	2	371	-	-	-	-	6,638	(6,265)	(18,267)
Termopantanal Ltda.		12	10	-	--		4	6,250	(6,232)	(18,269)

		2008							
Controladas (direct and indirect):		**Current assets**	**Noncurrent assets**	**Investments**	**PP&E and intangible assets**	**Deferred charges**	**Current liabilities**	**Noncurrent liabilities**	**Shareholders' equity**
Porto do Pecém Geração de Energia S.A.	**(a)**	13,431	63,276	-	407,006	7,628	337,973	73,212	80,156
MPX Pecém II Geração de Energia S.A.		887	1,259	-	63,643	4	0	65,792	1
UTE Porto do Itaqui Geração de Energia S.A.	**(b)**	140,661	83,077	-	567,958	8,307	631,749	103,568	64,686
Amapari Energia S.A.		25,369	-	-	72,633	30,799	24,555	19,710	84,536
UTE Porto do Açu Energia S.A.		68,123	-	-	12,556	32,603	62,082	-	51,200
Seival Sul Mineração Ltda.		117	-	-	56	4,046	112	112	3,995
UTE MPX Sul Energia Ltda.		1,338	-	-	564	657	58	-	2,501
MPX Comercializadora de Energia Ltda.		13,311	-	-	-	-	2,831	-	10,480
MPX Energia de Chile Ltda.		7,200	-	-	413	6,541	681	-	13,473
MPX Áustria GmbH		-	-	20,114	-	57	-	-	20,171
MPX Colômbia S.A.		1,589	-	-	5,823	11,370	1,335	-	17,447
MPX Viena GmbH		56	-	2,006	-	-	-	-	2,062
MPX Tauá Energia Solar Ltda.		1	-	-	-	-	-	-	1
Porto do Pecém Transportadora de Minérios S.A.		1	-	-	-	-	-	-	1
MPX Comercializadora de Combustíveis Ltda.		1	-	-	-	-	-	-	1
Termopantanal Participações Ltda.	**(c)**	399	-	12,671	-	-	209	364	12,497
Termopantanal Ltda.		8	11	-	12,198	6,075	7	5,614	12,671

(a) By means of Resolution 1557, on September 16, 2008 ANEEL approved the transfer of 50% of the stock of Porto do Pecém Geração de Energia S.A. to EDP Energias do Brasil S.A. On October 14, 2008 this transaction was conducted (see Note 10a). The presented balances of Porto do Pecém Geração de Energia S.A. have been reduced by 50% on account of the interest of EDP Energias do Brasil S.A. In 2009 capital increases were made of R$347,284.

(b) By means of Resolution 1556, on September 16, 2008 ANEEL approved the transfer of 100% of the stock of UTE Porto do Itaqui Geração de Energia S.A. to MPX Energia S.A. On October 14, 2008 this transaction was conducted (see Note 10c). In 2009 the Company's share capital was increased by R$288,314 through the contribution and payment of a AFAC (advance for a future capital increase).

(c) A provision was made for the impairment of property, plant and equipment and deferred assets on December 31, 2009 and recorded at Termopantanal Ltda.

The consolidated companies have been presented in Note 1.

6 Cash and cash equivalents

		Parent Company		Consolidated	
		2009	**2008**	**2009**	**2008**
Cash and banks		272	123	386,333	10,885
Fundo de Investimento Multimercado MPX 63	**(a)**	817,559	1,639,464	859,593	1,843,719
Bradesco Corporate FIC FI Referenciado DI Federal	**(b)**	-	-	255,627	-
CDB	**(c)**	95,187	-	134,687	-
Other fixed-income investments	**(d)**	5	1,214	2,493	4,188
		913,023	1,640,801	1,638,733	1,858,792

(a) Fundo de Investimento Multimercado Crédito Privado MPX 63 invests substantially in private securities with daily liquidity and an average yield of DI CETIP ("CDI"), regardless of the maturity of the respective securities. The average yield in the past three months has been 104.2% of CDI. It is a financial asset recorded at fair value through profit and loss. Early redemption does not compromise the yield. The fair value calculation for short-term investments is performed considering market information regarding future rates for similar securities.

This fund's quotas are held by the Company and its subsidiaries as follows:

	Consolidated	
Consolidated Multi-Market Fund	**2009**	**2008**
MPX Energia S.A.	817,559	1,639,464
UTE Porto do Itaqui Geração de Energia S.A.	19,447	118,703
UTE Porto do Açu Energia S.A.	12,371	67,711
MPX Pecém Geração de Energia S.A.	-	3,360
MPX Pecém II Geração de Energia S.A.	3,306	487
MPX Comercializadora de Energia Ltda.	6,240	10,648
Amapari Energia S.A.	296	2,024
UTE MPX Sul Energia Ltda.	374	1,322
	859,593	1,843,719

(b) Fundo Bradesco Corporate FIC FI Referenciado DI Federal is linked to national treasury bonds (LFT; LTF-O and LTN-O). This fund yielded an average of 98.58% of DI CETIP ("CDI") in 2009. The funding obtained by the subsidiary Porto do Pecem Gereção de Energia S.A. in loans from IDB and BNDES, as mentioned in note 15, have been invested in this fund

(c) Mainly consist of amounts invested in CDBs issued by Banco do Nordeste do Brasil ("BNB" - R$129,000) and Citibank (R$5,400). All the CDBs yield an average 100% CDI.

(d) Mainly consist of amounts invested in an investment fund by MPX Chile, with an average nominal yield of 2.82% in 2009.

As of December 31, 2009 and 2008 the Fund had the following portfolio, according to the order the securities were issued in:

				Parent Company		Consolidated	
Type	**Drawer**	**Date Issued**	**Maturity**	**2009**	**2008**	**2009**	**2008**
CDB Pós	Itaú	06/08/2009	09/24/2010	85,334	-	89,721	-
CDB Pós	Itaú	12/23/2009	09/24/2010	18,007	-	18,933	-
CDB Pós	CEF	04/07/2009	04/07/2011	39,983	-	42,039	-
CDB Pós	BNP	06/09/2009	05/30/2011	29,974	-	31,515	-
CDB Pós	Fibra	07/15/2009	01/21/2010	19,825	-	20,844	-
CDB Pós	Fibra	08/14/2009	02/10/2010	13,477	-	14,170	-
CDB Pós	Pactual	07/16/2009	07/06/2011	49,498	-	52,043	-
CDB Pós	Pactual	08/14/2009	08/05/2011	49,145	-	51,672	-
CDB Pós	Pactual	09/30/2009	09/20/2011	87,513	-	92,013	-
Debentures	Votorantim	07/24/2009	07/14/2011	163,772	-	172,192	-
Debentures	SAFRA	09/29/2009	12/23/2010	42,763	-	44,962	-
Debentures	Itaú	09/29/2009	09/19/2011	42,753	-	44,951	-
Debentures	Itaú	02/04/2009	02/01/2010	4,189	-	4,405	-
Debentures	Bradesco	06/09/2009	05/31/2011	34,956	-	36,754	-
Debentures	Itaú	05/27/2008	05/18/2010	-	23,951	-	26,935
Debentures	Votorantim	10/03/2008	09/24/2010	50,450	366,846	53,044	412,551
Debentures	Bradesco	10/03/2008	09/24/2010	59,599	375,793	62,664	422,611
CDB Pós	Unibanco	10/03/2008	09/24/2010	-	254,838	-	286,587
CDB Pós	Itaú	10/03/2008	09/29/2009	-	229,161	-	257,712
CDB Pós	Santander	10/03/2008	09/29/2009	-	366,828	-	412,530
Debentures	Bradesco	12/23/2008	12/14/2010	21,126	17,799	22,212	20,017
LTN –National Treasury Bills	Treasury	12/31/2009	03/07/2015	5,239	4,258	5,509	4,788
Treasury	Treasury			5	9	2	11
DI	Pactual			-	48	-	53
Fund charges				(49)	(67)	(52)	(76)
				817,559	1,639,464	859,593	1,843,719

The exclusive funds are regularly reviewed and audited by independent auditors and are subject to constraints on the payment of services rendered by the asset manager, attributed to operating investments, such as custody and audits fees and other expenses. There are no material financial obligations or company assets to guarantee these obligations.

7 Trade accounts receivable and subsidies receivable - Fuel Consumption Account-CCC

Trade receivables refer to the energy sold by the subsidiary Amapari Energia S.A. to Anglo Ferrous Amapá Ltda. to the amount of R$3,779 (R$6,065 as of December 31, 2008) and energy sales of R$2,516 made by MPX Comercializadora de Energia Ltda. (R$2,511 as of December 31, 2008).

On May 19, 2009 the subsidiary Amapari Energia S.A. obtained a court order obliging ANEEL to qualify UTE Serra do Navio for reimbursement of part of its costs incurred on fuels used as consumables in the generation and sale of electricity through the Fuel Consumption Account - CCC. As of December 31, 2009 the subsidiary received the total reimbursement of R$19,558 and has an outstanding balance of R$30,062 (R$5,878 as of December 31, 2008).

The portion of the CCC reimbursement for the period November 2008 to May 2009 of R$ 24,617 was reclassified to noncurrent assets in the third quarter of 2009. The subsidiary Amapari Energia S.A. is legally claiming the CCC amount referring to the period November 11, 2008 (commencement of commercial operations) to May 2009. Management does not expect to realize losses on the receivable balance.

8 Prepaid expenses

		Parent Company		Consolidated	
		2009	**2008**	**2009**	**2008**
Insurance guarantee - ANEEL	**(a)**	-	-	5,978	6,218
Area rental option	**(b)**	-	-	3,134	3,425
Borrowing cost	**(c)**	-	-	170	3,028
Insurance		231	-	-	-
		231	-	9,282	12,671
Current		231	-	5,100	5,395
Noncurrent		-	-	4,182	7,276

(a) Consists of the amount to cover the construction work of the power stations and electricity generation concession contracts awarded by ANEEL.

(b) Refers to the payment made by MPX Energia de Chile Ltda. to acquire the right to exercise the option to rent the land in Chile where the 1400 MW thermal power plant will be installed.

(c) Following the release of the long-term funding of Porto do Pecém Geração de Energia S.A and UTE Porto de Itaqui Geração de Energia S.A, in 2009 the funding costs were reclassified as an amendment to the loans and financing in the non-current liabilities, in accordance with the instructions of technical pronouncement CPC 08, approved by CVM Resolution 556 on November 12, 2008. For further information see Note 15.

9 Recoverable and deferred taxes

The balance of recoverable taxes is as follows:

	Parent Company		Consolidated	
	2009	**2008**	**2009**	**2008**
Income tax withheld at source	26,204	34,298	33,745	38,886
Prepaid income tax	10,999	4,301	11,076	4,486
Prepaid social contributions	10,512	17,557	10,566	17,665
Prepaid social contributions - prior year	8,243	-	8,274	-
Income tax withheld at source - prior year	13,525	-	20,213	-
Income tax withheld at source - loan	1,497	-	1,497	-
ICMS	21	-	3,475	-
Other	538	-	2,704	517
	71,539	56,156	91,550	61,554
Current	71,517	56,156	80,070	61,554
Noncurrent	22	-	11,480	-

Refers to income and social contribution taxes prepaid incurred in the course of the year, which will be offset against the income and social contribution taxes determined on the taxable income.

The balance of income tax withheld at source refers to amounts withheld on interest-earning bank deposits and related-party loans. These balances will be offset against the income and social contribution taxes payable.

Deferred taxes

Deferred income and social contribution taxes reflect future tax effects attributable to temporary differences between the tax bases of assets and liabilities and their carrying values.

In accordance with CVM Instruction 371, of June 27, 2002, the Company's subsidiaries Porto do Pecém Geração de Energia S.A., Porto do Itaqui Geração de Energia S.A., Porto do Açu Energia S.A., MPX Comercializadora de Combustíveis S.A and MPX Pecém II Geração de Energia S.A, based on their expectations of generating future taxable income, as determined in a technical study approved by management, also recognized tax credits on income tax loss carry forwards and the negative basis of social contribution tax from prior years, which have no statute of limitations and which can be offset against a maximum of 30% of annual taxable income. The carrying value of the deferred tax asset is reviewed periodically and the projections are reviewed annually. If there are significant factors that change the projections, they are also reviewed by the Company during the year.

The Company and its subsidiaries adopted the Transitional Taxation Scheme (RTT) so that the amendments introduced by Law 11638 of December 28, 2007 and articles 37 and 38 of Law 11941 of 2009, which changed the procedure for recognizing revenue, costs and expenses used to calculate the net income for the year defined in art. 191 of Law 6404 of December 15, 1976, shall not affect the calculation of the taxable income and social contribution calculation base of companies that opt for the Transitional Taxation Scheme – RTT, and for tax purposes the accounting methods and criteria in force at December 31, 2007 should be used.

Normative Instruction 949/09 of June 18, 2009 reiterates that the amendments to the corporate legislation shall not affect the calculation of the taxable income and social contribution calculation base of companies that opt for the Transitional Taxation Scheme – RTT, and for tax purposes the accounting methods and criteria in force at December 31, 2007 should be used.

Due to the amendments to the tax legislation, the Company recorded deferred assets and liabilities, thereby eliminating the accounting effects introduced by the new accounting changes. The origin of the deferred income and social contribution taxes is presented below:

	Parent Company	
Deferred charges	**2009**	**2008**
Tax loss carryforwards and negative basis of social contribution tax	9,641	-
Provision for investment devaluation	2,741	-
	12,382	-

	Consolidated	
Deferred charges	**2009**	**2008**
Tax loss carryforwards and negative basis of social contribution tax	9,641	-
Provision for investment devaluation	2,741	-
Temporary differences	121,715	-
Unrealized exchange variance on derivative operations - NDF	31,909	-
	166,006	-
Deferred liabilities		
Temporary differences	44,599	-
Unrealized exchange variance - Bridge loan	15,546	-
	60,145	-

10 Investment

	Parent Company		Consolidated	
	2009	**2008**	**2009**	**2008**
Equity interests	757,237	294,188	-	-
Advances for future capital increase - AFAC	148,170	65,792	-	-
Advance for future acquisition of an investment	560	280	560	280
	905,967	360,260	560	280

Equity interests

MPX Energia S.A. has equity interests in the following subsidiaries:

		Parent Company Interest	
		2009	**2008**
Direct subsidiaries			
Porto do Pecém Geração de Energia S.A.	**(a)**	50.00%	50.00%
MPX Pecém II Geração de Energia S.A.	**(b)**	99.70%	99.70%
UTE Porto do Itaqui Geração de Energia S.A.	**(c)**	100.00%	100.00%
Amapari Energia S.A.	**(d)**	51.00%	51.00%
UTE Porto do Açu Energia S.A.	**(e)**	100.00%	100.00%
Seival Sul Mineração Ltda.	**(f)**	70.00%	70.00%
UTE MPX Sul Energia Ltda.	**(g)**	99.90%	99.90%
MPX Comercializadora de Energia Ltda.	**(h)**	99.90%	99.90%
MPX Energia de Chile Ltda.	**(i)**	99.73%	99.73%
MPX Áustria GmbH	**(j)**	100.00%	100.00%
MPX Tauá Energia Solar Ltda.	**(k)**	99.90%	99.90%
Porto do Pecém Transportadora de Minérios S.A.	**(l)**	99.90%	99.90%
MPX Comercializadora de Combustíveis Ltda.	**(m)**	99.90%	99.90%
Termopantanal Participações Ltda.	**(n)**	66.67%	66.67%

The balance of investments breaks down as follows:

		Investment	
		2009	**2008**
Direct subsidiaries:			
Porto do Pecém Geração de Energia S.A.	**(a)**	257,690	80,156
MPX Pecém II Geração de Energia S.A.	**(b)**	66,452	1
AFAC MPX Pecém II Geração de Energia S.A.	**(b)**	15,000	65,792
UTE Porto do Itaqui Geração de Energia S.A.	**(c)**	279,803	64,686
AFAC Porto do Itaqui Geração de Energia Ltda	**(c)**	126,000	-
Amapari Energia S.A.	**(d)**	41,529	43,113
UTE Porto do Açu Energia S.A.	**(e)**	49,177	51,200
Seival Sul Mineração Ltda.	**(f)**	2,964	2,796
UTE MPX Sul Energia Ltda.	**(g)**	1,760	2,501
AFAC MPX Sul Energia Ltda.	**(g)**	4,190	-
MPX Comercializadora de Energia Ltda.	**(h)**	11,015	10,480
MPX Energia de Chile Ltda.	**(i)**	12,496	13,472
MPX Áustria GmbH	**(j)**	34,042	17,448
MPX Tauá Energia Solar Ltda.	**(k)**	307	1
Porto do Pecém Transportadora de Minérios S.A.	**(l)**	1	1
MPX Comercializadora de Combustíveis Ltda.	**(m)**	1	1
AFAC Comercializadora de Combustíveis Ltda.	**(m)**	2,980	-
Termopantanal Participações Ltda. **(*)**	**(n)**	-	8,332
Advance for future acquisition of an investment **(**)**		560	280
		905,967	360,260

(*) On September 30, 2008 MPX Energia S.A. recorded a provision for devaluation of its 66.67% interest in Termopantanal Participações Ltda. (see Note 10n).

In order to prevent its assets being valued in excess of their recoverable value, on December 31, 2009 the Company made a provision for impairment of the property, plant and the equipment and deferred assets of Termopantanal Ltda., as mentioned in notes 11 and 12.

(**) MPX Energia S.A. is party to a quota transfer and assignment agreement with the entity Nova - Sistemas de Energia Ltda. (a company in the business of wind energy generation) and in the second quarter of 2009 made an advance for future acquisition of an investment of R$280. As of December 31, 2009, the balance is R$560. Implementation of this transaction is mainly subject to the following conditions:

- Completion of a technical audit
- Obtainment of debt clearance certificates
- ANEEL consent.

The changes in investments in subsidiaries are as follows:

Direct subsidiaries		Balance at 2008	Paid in Capital	Equity Income	Exchange Variance	Equity Appraisal Adjustment	AFAC	Balance in 2009
Porto do Pecém Geração de Energia S.A.	**(a)**	80,156	173,642	35,655	-	(31,763)	-	257,690
MPX Pecém II Geração de Energia S.A.	**(b)**	1	102,192	(35,741)	-	-	-	66,452
AFAC MPX Pecém II Geração de Energia S.A.	**(b)**	65,792	(65,792)	-	-	-	15,000	15,000
UTE Porto de Itaqui Geração de Energia S/A	**(c)**	64,686	288,314	(73,197)	-	-	-	279,803
AFAC UTE Porto de Itaqui Geração de Energia S/A	**(c)**	-	-	-	-	-	126,000	126,000
Amapari Energia S.A.	**(d)**	43,113	-	(1,584)	-	-	-	41,529
UTE Porto do Açu Energia S.A.	**(e)**	51,200	-	(2,023)	-	-	-	49,177
Seival Sul Mineração Ltda.	**(f)**	2,796	1,214	(1,046)	-	-	-	2,964
UTE MPX Sul Energia Ltda.	**(g)**	2,501	3,075	(3,816)	-	-	-	1,760
AFAC UTE MPX Sul Energia Ltda.	**(g)**	-	-	-	-	-	4,190	4,190
MPX Comercializadora de Energia Ltda.	**(h)**	10,480	-	535	-	-	-	11,015
MPX Energia de Chile Ltda.	**(i)**	13,472	5,144	(5,030)	(1,090)	-	-	12,496
MPX Áustria GmbH	**(j)**	17,448	59,233	(31,999)	(10,640)	-	-	34,042
MPX Tauá Energia Solar Ltda.	**(k)**	1	350	(44)	-	-	-	307
Porto do Pecém Transportadora de Minérios S.A.	**(l)**	1	-	-				1
MPX Comercializadora de Combustíveis Ltda.	**(m)**	1	-	-	-	-	-	1
AFAC MPX Comercializadora de Combustíveis Ltda.	**(m)**	-	-	-	-	-	2,980	2,980
Termopantanal Participações Ltda.	**(n)**	8,332		(8,332)	-	-	-	-
Advance for future acquisition of an investment		280	280	-	-	-	-	560
		360,260	567,652	(126,622)	(11,730)	(31,763)	148,170	905,967

(a) Porto do Pecém Geração de Energia S.A.

It is authorized to build and operate a coal-fired thermal power plant to be installed in the Pecém Industrial and Port Complex ("CIPP"), in Ceará state, with an installed capacity of 720 MW and completion scheduled for 2011. This authorization is valid for 35 years, as per Ordinance 226 issued June 27, 2008 by the Ministry of Mines and Energy.

To build this power station, on January 28, 2008 Porto do Pecém Geração de Energia S.A. and Mabe Construção e Administração de Projetos Ltda. ("Mabe") signed an Engineering, Procurement and Construction – EPC contract in the form of a lump sum turn key worth R$2,000,956. Construction work commenced in July 2008 and is forecast for conclusion in 2011.

On October 14, 2008 EDP Energias do Brasil S.A. acquired a 50% interest in Porto do Pecém Geração de Energia S.A. in an acquisition that involved the swap of a 50% interest in Porto do Pecém Geração de Energia S.A. for the entire capital of the subsidiary UTE Porto do Itaqui Geração de Energia S.A., the new name of Diferencial Energia Empreendimentos e Participações Ltda. This transaction went ahead after the following conditions had been verified:

- On October 16, 2007 Porto do Pecém Geração de Energia S.A. sold 615 MW at auction A-5 held by the Electricity Trading Chamber (CCEE), for a supply term of 15 years. These sales were ratified by ANEEL on said date.

- By means of Resolution 1557, on September 16, 2008 ANEEL approved the transfer of 50% of the stock of Porto do Pecém Geração de Energia S.A. to EDP Energias do Brasil S.A., awarding a term of 90 days to implement this transfer, which took place within this term.

MPX Energia S.A signed the long-term financing agreements with the Inter-American Development Bank ("BID") and the National Social and Economic Development Bank ("BNDES") on July 10, 2009. The funds have been borrowed to implement the coal-fired thermal power plant to be installed in the Pecém Industrial and Port Complex.

The loan package for the venture was approved after a lengthy and thorough due diligence process, which closely examined the technical, environmental, social, economic and financial matters of the projects. Citibank acted as an adviser to the venture in the structuring of the financing loans from BNDES and IDB.

On October 14, 2009 the National Social and Economic Development Bank ("BNDES") released a R$700 million long-term loan to Porto do Pecém Geração de Energia S.A. The amount released enabled the bridge loan to be settled and also covered the disbursements scheduled to implement the venture over recent months. Subsequent disbursements will be made on the same terms using the capital contributions made by the controlling shareholders.

The BNDES financing agreement involves a loan of R$1.4 billion (in nominal R$, excluding interest during the construction), with a total term of 17 years, including 14 years for amortization and a grace period for payment of interest and principal of until July 2012. The contracted cost is LTIR + 2.77 p.a. and the interest is and will be capitalized during the construction phase.

On October 30, 2009 the Inter-American Development Bank ("BID") released a USD 260 million long-term loan to Porto do Pecém Geração de Energia S.A. The total amount disbursed consists of a direct loan of USD 117 million ("Loan A") and an indirect loan of USD 143 million ("Loan B"). The amount released is equal to the foreign currency CAPEX incurred plus approximately 75% of the disbursements scheduled to implement the venture over the next 6 months. Subsequent disbursements will be made on the same terms using the capital contributions made by the controlling shareholders. MPX has an interest of 50% in Porto do Pecém Geração de Energia S.A.

The loan agreement with the IDB consists of Loan A worth USD 147 million and Loan B worth USD 180 million. Loan A has a total term of 17 years, with 14 years repayment and a grace period on the principal of until July 2012. Loan B has a total term of 13 years, with 10 years repayment and a grace period on the principal of until July 2012. Loan A and Loan B are initially charged interest of Libor + 350 bps and Libor + 300 bps respectively, with step-ups throughout the period, as follows:

Including the total financing provided by BNDES and BID and the investment required to implement the venture, the project will have a capital/debt structure of approximately 25%/75%.

As of December 31, 2009 the share capital of Porto do Pecém Geração de Energia S.A. is R$507,595, consisting of capital increases through AFACs of R$307,884 and contributions of R$39,400 from its shareholders MPX Energia S.A. and EDP Energias do Brasil S.A, both with a 50% interest.

(b) MPX Pecém II Geração de Energia S.A.

On September 30, 2008, the project Porto do Pecém Fase II prevailed at auction A-5, selling an average 276 MW for a fixed revenue of R$ 206.98 million/year, restated by the IPCA price index, over a contractual term of 15 years. The subsidiary MPX Pecém II Geração de Energia S.A. was founded on October 07, 2008 with a share capital of R$1. MPX Energia S.A. holds a 99.90% interest in this company, which was founded to install and commercially operate a thermal power plant under the project Porto do Pecém Fase II.

On November 06, 2008 MPX Pecém II Geração de Energia S.A. and Mabe Construção e Administração de Projetos Ltda. (“Mabe”) signed an Engineering, Procurement and Construction – EPC contract in the form of a lump sum turn key worth R$1,071,200. Construction work commenced in July 2008 and is forecast for conclusion in 2011. Commercial operations are expected to commence in 2012.

In the 3rd quarter MPX Pecém II Geração de Energia S.A. capitalized its entire advance for future capital increase (AFAC) of R$102,192.

In 2009 the company’s share capital was R$102,193.

(c) UTE Porto do Itaqui Geração de Energia S.A.

It is authorized to build and operate a coal-fired thermal power plant to be installed in Sector D of the DISAL Industrial Estate, in Itaqui Port, Maranhão state, with an installed capacity of 360 MW. This authorization is valid for 35 (thirty-five) years, as per Ordinance 177 issued May 12, 2008 by the Ministry of Mines and Energy.

On January 27, 2008 the subsidiary and Mabe Construção e Administração de Projetos Ltda. ("Mabe") signed an Engineering, Procurement and Construction – EPC contract in the form of a lump sum turn key worth R$1,007,768. Construction work commenced in February 2009 and is forecast for conclusion in 2011.

On October 14, 2008 MPX Energia S.A. acquired the entire capital of UTE Porto do Itaqui Geração de Energia S.A. from EDP Energias do Brasil S.A. in an acquisition that involved the swap of a 50% interest in Porto do Pecém Geração de Energia S.A. for the entire capital. This transaction generated goodwill for of R$15,470, on the grounds of its future profits, as per Note 12.

This transaction went ahead after the following conditions had been verified:

- On October 16, 2007 UTE Porto do Itaqui Geração de Energia S.A. sold 315 MW at auction A-5 held by the Electricity Trading Chamber (CCEE), for a supply term of 15 years. These sales were ratified by ANEEL on said date, and

- By means of Resolution 1556, on September 16, 2008 ANEEL approved the transfer of 100% of the stock of UTE Porto do Itaqui Geração de Energia S.A. to MPX Energia S.A. awarding a term of 90 (ninety) days to implement this transfer.

The increase of R$63,000 and transformation of corporate status from a limited company to a joint-stock company were approved on January 19, 2009. As a result of the transformation the company's name became UTE Porto de Itaqui Geração de Energia S.A.

The company's share capital increase was approved on December 09, 2009, made through the capitalization of AFAC credits of R$225,314.

As of December 31, 2009 MPX Energia S.A. held the entire share capital amounting to R$353,000.

(d) Amapari Energia S.A.

Founded on April 12, 2007 in a partnership between MPX Energia S.A. and Centrais Elétricas do Norte do Brasil S.A. – Eletronorte, which held 51% and 49% of the shares respectively. This refers to a diesel-oil fired thermal power plant in Serra do Navio, Amapá state. By way of Consenting Resolution 1369 issued May 20, 2008, ANEEL authorized Amapari Energia S.A. to operate as an Independent Electricity Producer ("PIE"), with an initial installed capacity of 23 MW for the term of 29 years. This capacity was revised downwards to 21.6 MW by ANEEL Order 3751 issued October 14, 2008.

On June 10, 2008 the Generation Services Inspections Division ("SFG") issued Order 2197 on June 09, 2008 authorizing test-based energy generation to commence. It was authorized to commence commercial operations by Order 4143 issued November 07, 2008.

In FY 2008, Amapari Energia S.A. received capital contributions amounting to R$84,761 from its shareholders MPX Energia S.A. and Centrais Elétricas do Norte do Brasil S.A. – Eletronorte, in proportion to their respective interests of 51% and 49% respectively.

As of December 31, 2009 the share capital of Amapari Energia S.A. is R$84,761.

(e) UTE Porto do Açu Energia S.A.

Founded on September 17, 2007, this subsidiary obtained an environmental license on July 30, 2008 to install a 2100 MW coal-fired thermal power plant in São João da Barra, Rio de Janeiro state.

In order to maintain the fiscal discipline that underpins the business plan and as a result of the slide of the Brazilian real against the US dollar in 2008, the subsidiary decided not to submit the project of UTE Porto do Açu Energia S.A. at the A-5 energy auction held September 30, 2008.

In FY 2008 UTE Porto do Açu Energia S.A. received capital contributions of R$51,200.

On October 14, 2009 the State Environmental Department (INE) authorized the implementation of the electricity production plant by way of installation license IN000882.

As of December 31, 2009 MPX Energia S.A. holds the entire share capital.

(f) Seival Sul Mineração Ltda.

Founded on May 21, 2001, the subsidiary executed a leasing contract with Companhia Nacional de Mineração Candiota to operate a coalmine in the city of Candiota, Rio Grande do Sul state. Priority over the output will be afforded to UTE MPX Sul Energia Ltda.

The mining rights have been awarded under concession by the National Mining Production Department ("DNPM") through Mining Ordinances 119, 121 and 122 of January 27, 1984 and 407 of March 14, 1985. MPX Energia S.A. acquired 25,708 shares in MDU Brasil Ltda. in June 2007, raising its overall interest to 70%. The remaining 30% is held by CCP Participações Ltda.

In FY 2008, Seiva Sul Mineração Ltda. received capital contributions totaling R$3,245 from its shareholders MPX Energia S.A. and CCP Participações Ltda., in proportion to their respective interests of 70% and 30% respectively.

The license of this operation expired on March 31, 2009. A renewal application was submitted on April 13, 2009 to the State Environmental Protection Agency – FEPAM. Following the finalization of the environmental compensation plan, on October 21, 2009 the State Environmental Protection Agency – FEPAM of Rio Grande do Sul state renewed the operating license for the coal mining operation in an area of 1,289.50 hectares in Candiota, Rio Grande do Sul state.

On December 22, 2009, Seiva Sul Mineração Ltda. received total capital contributions from its shareholders MPX Energia S.A. and CCP Participações Ltda. of R$1,735, in proportion to their respective interests of 70% and 30% respectively.

As of December 31, 2009 the company's share capital was R$ 5,730.

(g) UTE MPX Sul Energia Ltda.

Founded on September 24, 2007 under the name MPX Seival II Energia Ltda, with MPX Energia S.A. holding a controlling interest of 99.90%. It will be a coal-fired thermoelectric power plant built in the municipality of Candiota, State of Rio Grande do Sul, with an estimated generating capacity of 600 MW. On August 14, 2008 the Company changed its name to its current name.

Seival Sul Mineração Ltda. will supply the coal. On February 27, 2008 MPX Energia S.A. signed a Memorandum of Intent with the Government of the State of Rio Grande do Sul for the installation of the thermal power plant.

In FY 2008 UTE MPX Sul Energia Ltda. received total capital contributions of R$2,500.

On November 11, 2009 IBAMA issued Preliminary License 332/2009, which certifies the environmental feasibility of the project which involves the implementation of a 600 MW coal-fired thermal power plant. MPX Sul's coal requirement will be supplied by the Seival mine, which MPX Energia S.A. owns 70% of.

On December 31, 2009 MPX Energia S.A. increased the share capital of MPX Sul by paying in the AFAC of R$3,075.

As of December 31, 2009 MPX Energia S.A. held 99.9% of the share capital amounting to R$5,576.

(h) MPX Comercializadora de Energia Ltda.

It was founded on September 17, 2007 to sell, import and export electricity. On February 25, 2008 MPX Comercializadora de Energia Ltda. was authorized by ANEEL to sell electricity at CCEE by way of Order 747/08. The process of acceding to CCEE has ended.

In FY 2008 MPX Comercializadora de Energia Ltda. received total capital contributions of R$10,479.

As of December 31, 2009 MPX Energia S.A. held 99.9% of the share capital amounting to R$10,519.

(i) MPX Energia de Chile Ltda. - UTE Castilla

This will be a coal-fired thermal power plant to be built in the vicinity of the city Copiapó, in Region III of Chile in the Atacama Desert with a total generating capacity projected in the business plan of up to 1400 MW.

On October 03, 2007 MPX Energia S.A. acquired a 70% interest in MPX Energia de Chile Ltda. from Ardpoint, a company controlled by Centennial Asset Ltd. On February 19, 2008 Centennial Asset Ltd. decided to transfer to MPX Energia S.A. its 30% interest in MPX Energia de Chile Ltda.

In FY 2009 MPX Energia de Chile Ltda. received total capital contributions of R$5,144 (corresponding to USD 2,848,000).

As of December 31, 2009 MPX Energia S.A. and MPX Austria GmbH held 99.73% and 0.27% of its capital respectively.

(j) MPX Áustria GmbH, MPX Viena GmbH and MPX Colômbia S.A.

Headquartered in Bogota, MPX Colômbia S.A. was incorporated on April 14, 2008 with a share capital of R$5 ($5,130,000 Colombian pesos) with the following core activities: drilling, extraction, transportation and sale of coal.

On May 26, 2008 MPX Energia S.A. acquired the entire share capital of MPX Austria GmbH, headquartered in Vienna, Austria, with a share capital of R$91 (EUR 35). It also acquired an indirect controlling interest in MPX Viena GmbH, also headquartered in Vienna with a share capital of R$91 (EUR 35). MPX Austria GmbH holds the entire share capital of the latter company and its core activity is the acquisition of equity investments in Austria and overseas related to the mining and sale of coal.

As of December 31, 2009 MPX Colômbia S.A. had the following shareholders:

Shareholder	31/12/2009
MPX Áustria GmbH	89.00%
MPX Viena GmbH	10.00%
Other	1.00%
Total	100.00%

In FY 2009 MPX Áustria GmbH raised the share capital of MPX Colômbia S.A. and MPX Viena GmbH by R$59,233 (or USD 29,540,000) and R$5,923 (or USD 2,954,000) respectively.

(k) MPX Tauá Energia Solar Ltda.

Founded on September 22, 2008 to generate and sell electricity by way of a solar energy plant to be installed in Tauá, Ceará state. This solar energy plant will have an initial capacity of 1 MW. Along with the plant, a photovoltaic solar panel factory will also be built in Ceará state. As of December 31, 2009 MPX Energia S.A. held 99.9% of the share capital.

On February 20, 2009 MPX Energia S.A. increased the share capital of MPX Tauá Energia Solar Ltda. by paying in the AFAC of R$350.

(l) Porto do Pecém Transportadora de Minérios S.A.

Founded on October 08, 2008 to transport ore by operating an unloading system consisting of conveyor belts. This will be set up in the Pecém Industrial and Port Complex ("CIPP"), in Ceará state,

As of December 31, 2009 MPX Energia S.A. held 99.9% of the share capital.

(m) MPX Comercializadora de Combustíveis Ltda.

Founded on September 23, 2008 in Rio de Janeiro, Rio de Janeiro state to sell, import and export all types of coal, byproducts and other types of fuel, in addition to providing brokerage services.

As of December 31, 2009 MPX Energia S.A. held 99.9% of the share capital.

(n) Termopantanal Participações Ltda. and Termopantanal Ltda.

Termopantanal Ltda. was incorporated for a 30-year concession term on September 10, 2003 in an association between the Company and the Bolivian company Cooperativa Rural de Eletrificación ("CRE") to build a 33-km gas pipeline commencing in Corumbá, Mato Grosso do Sul state, and interconnecting with the Brazil-Bolivia gas pipeline in the Bolivian city of Puerto Suarez.

A consortium was established to build the gas pipeline with Companhia de Gás do Mato Grosso do Sul ("MS-GÁS"), where Termopantanal Ltda. was responsible for the construction and assembly work. According to the consortium contract, each party will record amounts invested to build the pipeline under property, plant and equipment, which will be subject to depreciation after the pipeline comes into use. The contract also states that after the depreciation of Termopantanal's assets has finished, its interest will be transferred to MS-GAS for free. The construction work was concluded in December 2006. The consortium stipulates that its income will be shared among the consortium members in proportion to the investments made. As of December 31, 2008 Termopantanal Ltda. had invested a total of R$12,169.

The Company entered this venture through its direct subsidiary Termopantanal Participações Ltda. in order to guarantee the supply of gas to the 44-MW UTE Termopantanal, to be built in Corumbá, Mato Grosso do Sul state. Before the start-up of UTE Termopantanal, Termopantanal Ltda. is considered to be preoperational, as its assets are considered to be part of the UTE Termopantanal project, which is still in progress. In March 2004, a gas supply agreement was executed with Petrobras Bolivia and MS-GÁS.

The changes introduced to local hydrocarbon legislation by the Bolivian government compromised this contract. Following negotiations with Bolivian state company YPFB, on May 05, 2007 a commitment was signed to supply the required volumes of fuel (1 million cubic meters/day). However, the contract was not made official. As of December 31, 2009 there are no firm official contracts (or commitments) for UTE Termopantanal to acquire gas.

In order to maintain the fiscal discipline that underpins the business plan and as a result of the continued problems in Bolivia, with serious ramifications for the hydrocarbons sector and consequently gas supplies, MPX Energia S.A. decided not to make further investments in this project, and will prioritize resources and effort for other projects of the business plan while this situation persists.

MPX Energia S.A. accordingly decided to record a provision for losses regarding the overall investment corresponding to its 66.67% interest in Termopantanal Participações Ltda.

11 Property, plant and equipment

a. Breakdown of balances

			2009					
			Parent Company			Consolidated		
		Depreciation rate % p.a.	Cost	Depreciation	Net	Cost	Depreciation	Net
Furniture and fixtures		10	1,853	(458)	1,395	2,722	(515)	2,207
Machinery and equipment	(a)	3-5/10	344	(17)	327	77,388	(3,864)	73,524
Computer equipment		20	1,271	(456)	815	1,696	(518)	1,178
Vehicles		20	-	-	-	517	(70)	447
Improvements to rented assets		10	1,167	(75)	1,092	7,130	(185)	6,945
Gas pipeline	(b)	-	-	-	-	12,169	-	12,169
Provision for impairment						(12,169)		(12,169)
Property, plant and equipment in progress	(c)	-	21,736	-	21,736,	1,904,367	-	1,904,367
			26,371	(1,006)	25,365	1,993,820	(5,152)	1,988,668

			2008					
		Depreciation rate % p.a.	Parent Company			Consolidated		
			Cost	Depreciation	Net	Cost	Depreciation	Net
Furniture and fixtures		10	1,554	(283)	1,271	2,319	(326)	1,993
Machinery and equipment	**(a)**	3-5/10	-	-	-	72,236	(579)	71,657
Computer equipment		20	1,044	(244)	800	1,174	(262)	912
Software licenses		20	-	-	-	-	-	-
Improvements to rented assets		10	1,192	(42)	1,150	1,953	(46)	1,907
Gas pipeline	**(b)**	-	-	-	-	12,169	-	12,169
Property, plant and equipment in progress	**(c)**	-	-	-	-	1,052,003	-	1,052,003
			3,790	(569)	3,221	1,141,854	(1,213)	1,140,641

b. Changes in the cost

	Parent Company				
	2008	Change			2009
	Cost	Additions	Write-offs	Transfers	Cost
Furniture and fixtures	1,554	299	-	-	1,853
Machinery and equipment	-	378	-	(34)	344
Computer Equipment	1,044	250	(23)	-	1,271
Improvements to third-party property	1,192	111	-	(136)	1,167
Property, plant and equipment in progress	-	21,566	-	170	21,736
	3,790	22,604	(23)	-	26,371

	Consolidated				
	2008	**Change**			**2009**
	Cost	**Additions**	**Write-offs**	**Transfers**	**Cost**
Furniture and fixtures	2,319	264	(2)	141	2,722
Machinery and equipment	72,236	5,118	-	34	77,388
Computer Equipment	1,174	544	(23)	1	1,696
Improvements to third-party property	1,953	5,041	-	136	7,130
Vehicles	-	517		-	517
Gas pipeline	12,169	-	-	-	12,169
Provision for impairment	-	(12,169)	-	-	(12,169)
Property, plant and equipment in progress	1,052,003	852,676	-	(312)	1,904,367
	1,141,854	851,991	(25)	-	1,993,820

Provision for assets impairment

During the year ended December 31, 2009, the Company identified that certain assets could have been recorded for amounts higher than their recoverable value. Based on this, Termopantanal Ltda. made a provision for impairment of R$12,169, equal to the balance of property, plant and equipment of the subsidiary Termopantanal Ltda.

a. Machinery and equipment

It basically consists of a power station, line and substation of Amapari Energia S.A., which came into operation in November 2008. Asset depreciation is calculated at the straight line method based on the rates determined by Ordinance 815 issued November 30, 1994 by the National Electric Energy Agency - ANEEL, which takes into account the estimated useful life of the assets and residual values.

In the first quarter of 2009 Amapari Energia S.A. management reclassified the machinery and equipment related to the Capivara SHP project in the amount of R$10,966 to property, plant and equipment in progress. A unitization and physical inventory were conducted in February 2009, under which it was required to reclassify property, plant and equipment in service to property, plant and equipment in progress, to assure the assets have been correctly classified in the accounting records.

b. Gas pipeline

Refers to the costs incurred by the subsidiary Termopantanal Ltda. to build the gas pipeline in a consortium with MS GÁS, which was concluded in December 2006. As mentioned in Note 10n, MPX Energia S.A. accordingly decided to record a provision for losses for the overall investment amount corresponding to its 66.67% interest in Termopantanal Participações Ltda. On December 31, 2009 the subsidiary made a provision for impairment of this asset due to the fact it does not expect to recover the amount.

c. Property, plant and equipment in progress

Mainly refers to expenses incurred on advances made for reserves and equipment acquisitions to build the thermal power plants Porto do Pecém Geração de Energia S.A., MPX Pecém II Geração de Energia S.A. and UTE Porto do Itaqui Geração de Energia S.A., guaranteed by bank guarantees of R$581,257. The balances have been recorded under "property, plant and equipment in progress" and will be transferred to "property, plant and equipment in service" when operations start. As stated in Notes 10a, 10b and 10c, these subsidiaries and MABE signed an EPC agreement in the form lump sum turn key to build the power stations. As established in the respective agreements, 15% of each advance made should be withheld as a guarantee for delivery of the power station, to be disbursed in the course of FY 2009, if the EPC presents bank guarantees. It should be noted that it is not known when this withheld portion of the advance will be applied in the construction of the plant. As of December 31, 2009 the total guarantees retained by the subsidiaries amount to R$210,646 (R$110,843 as of December 31, 2008) and have been recorded under the respective subsidiaries' current liabilities and presented in the consolidated financial statements under "Contractual retentions".

The property, plant and equipment in progress of MPX Energia S.A. basically consists of expenses incurred on environmental licensing and project studies, such as: Porto do Pecém, Projeto Capim Elefante, Colômbia, Energia Eólica, Energia Solar de Tauá, Projeto Paracuru, Projeto PCH, Pecém II, Porto do Açú, Porto do Açú II, Bacia do Parnaíba, UTE Ipojuca, UTE Macau and UTE MPX Sul and advances for the acquisition of equipment for the plant Porto do Pecém Geração de Energia S.A. The balances have been recorded under "property, plant and equipment in progress" and will be transferred to "property, plant and equipment in service" when operations start.

12 Intangible assets

a. Breakdown of balances

			2009					
		Amortization rate	Parent Company			Consolidated		
		% p.a.	Cost	Amortization	Net	Cost	Amortization	Net
Software licenses		20	608	(143)	465	1,584	(282)	1,302
Coal mining rights	(a)	-	-	-	-	14,471	-	14,471
Goodwill on investments	(b)	-	15,470	-	15,470	15,470	-	15,470
Usage rights	(c)	-	-	-	-	9,642	-	9,642
			16,078	(143)	15,935	41,167	(282)	40,885

			2008					
		Amortization rate	Parent Company			Consolidated		
		% p.a.	Cost	Amortization	Net	Cost	Amortization	Net
Software licenses		20	271	(60)	211	373	(60)	313
Coal mining rights	(a)	-	-	-	-	5,328	-	5,328
Goodwill on investments	(b)	-	15,470	-	15,470	15,470	-	15,470
			15,741	(60)	15,681	21,171	(60)	21,111

b. Changes in the cost

	Parent Company			
	2008	**Change**		**2009**
	Cost	**Additions**	**Write-offs**	**Cost**
Software licenses	271	337	-	608
Goodwill on investments	15,470	-	-	15,470
	15,741	337	-	16,078

	Consolidated			
	2008	**Change**		**2009**
	Cost	**Additions**	**Write-offs**	**Cost**
Software licenses	373	1,211	-	1,584
Coal mining rights	5,328	9,143	-	14,471
Goodwill on investments	15,470	-	-	15,470
Usage rights	-	9,642	-	9,642
	21,171	19,996	-	41,167

Coal mining rights in Columbia

On March 26, 2008 MPX Energia S.A. signed two coal mining rights call options in the locations El Cesar and La Guajira near the main coal mines in operation in Colombia worth a total of USD 18 million, payment of which is subject to the verification of certain conditions. In October 2008 the surveys conducted in El César showed that the coal there was not of good enough quality to be explored. All further expenses and commitments undertaken involving mining rights are being paid directly by MPX Colômbia S.A. Since the first half of 2009 the soil drilling and analysis activities have been stepped up, especially in the site where La Guajira is located.

The first technical report was issued on September 15, 2009 certifying the thermal coal resources in its concession areas in the district of La Guajira. Resources of 110 million tons have been outlined, which have a high potential for opencast mining. The resources were identified through data from an exploratory campaign covering 320 hectares.

MPX Colômbia S.A, a wholly owned subsidiary of MPX, holds total mining rights over 65,000 hectares in this district.

140 bores have been drilled, of which 75 were positive, in a total of approximately 50,000 meters of drilling. The geological survey and exploration work is continuing, and is expected to yield a secondary resources report in the first quarter of 2010 in addition to the reclassification of part of the current resources indicated.

Deep bores are also being drilled in the region to evaluate underground resources, which have yielded highly promising initial results. This additional potential was not included in the first certification report.

Goodwill on investments

On October 14, 2008 MPX Energia S.A. acquired the entire capital of UTE Porto do Itaqui Geração de Energia S.A. from EDP Energias do Brasil S.A. in an acquisition that involved the swap of a 50% interest in Porto do Pecém Geração de Energia S.A. for said capital. This transaction generated goodwill for MPX Energia S.A. of R$15,470. This goodwill is based on the expectation of future profitability and is not undergoing amortization.

Usage rights

On June 15, 2009 the subsidiary UTE Porto do Itaqui Geração de Energia S.A. signed an instrument to use a right of way with the company Transnordestina Logística S.A. worth R$6,000 referring to be right to use the right of way in the section called Itaqui-Bacanga in the city of São Luís, Maranhão state, where the transmission line connecting the power station to the substation of Eletronorte will be installed.

Amortization will commence as soon as the asset is available for use.

The subsidiary UTE Porto do Itaqui Geração de Energia S.A. entered into easement agreements worth R$3,642 in FY 2009.

13 Deferred charges

	2009	2008
MPX Energia S.A.	1,155	2,753
Porto do Pecém Geração de Energia S.A.	126	(2,528)
MPX Pecém II Geração de Energia S.A.	4	4
UTE Porto do Itaqui Geração de Energia S.A.	1,228	(8,814)
Amapari Energia S.A.	8,666	30,799
UTE Porto do Açu Energia S.A.	14,628	32,603
Seival Sul Mineração Ltda.	4,046	4,046
UTE MPX Sul Energia Ltda.	640	659
MPX Energia de Chile Ltda.	6,541	6,541
MPX Áustria GmbH	57	57
MPX Colômbia S.A.	11,370	11,370
Termopantanal Participações Ltda. **(*)**	-	6,075
	48,461	83,565

(*) On December 31, 2009 Termopantanal Participações Ltda made a provision for impairment of the deferred asset due to the fact it does not expect to recover the asset.

The Company and its subsidiaries elected to maintain the deferred charges balance until it has been fully realized through amortization or write-off in the statement of income, in accordance with CPC 13 approved by CVM resolution 565/08. The expenses incurred on deferred assets shall be amortized over a 10-year period as from start-up, or written off against the income statement when management assesses that such future economic rewards no longer exist. The deferred asset is subject to impairment testing on at least an annual basis.

On December 31, 2008 MPX Energia S.A and its subsidiaries elected to maintain the position of open hedge contracts (mark to market) in their balance of deferred assets, making a contra entry in the “provision for derivative losses” in the liabilities. This provision for impairment derived from NDF sale contracts with the financial institutions. The liability was settled in full in FY 2009 through the payment and/or recovery of the deferred losses by recognizing exchange variance gains. The amount was therefore fully amortized in the financial year ended December 31, 2009.

The breakdown of the consolidated deferred assets by type follows:

	2009									
	Personnel	**Services**	**Consumables**	**Taxes**	**Interest**	**Impairment Provision**	**Rent**	**Financial income/loss**	**Other**	**Total**
MPX Energia S.A.	149	984	-	-	-	-	-	17	5	1,155
Porto do Pecém Geração de Energia S.A.	438	2,355	-	760	226	-	208	(4,505)	644	126
MPX Pecém II Geração de Energia S.A.	-	-	-	-	-	-	-	(7)	11	4
UTE Porto do Itaqui Geração de Energia S.A.	689	4,600	18	212	540	-	86	(7,619)	2,702	1,228
Amapari Energia S.A.	368	2,243	122	27	325	-	338	5,271	(28)	8,666
UTE Porto do Açu Energia S.A.	1,267	10,479	-	-	129	-	37	-	2,716	14,628
Seival Sul Mineração Ltda.	225	3,067	-	-	754	-	-	-	-	4,046
UTE MPX Sul Energia Ltda.	101	505	-	-	-	-	-	-	34	640
MPX Energia de Chile Ltda.	1,155	4,888	580	-	-	-	-	(143)	61	6,541
MPX Áustria GmbH	-	57	-	-	-	-	-	-	-	57
Termopantanal Participações Ltda.	321	2,423	801	-	2,954	(6,075)	-	-	(424)	-
MPX Colômbia S.A.	88	11,220	-	-	-	-	-	(24)	86	11,370
	4,801	42,821	1,521	999	4,928	(6,075)	669	(7,010)	5,807	48,461

	2008							
	Personnel	Services	Consumables	Taxes	Interest	Financial income/loss	Other	Total
MPX Energia S.A.	149	2,524	-	-	-	17	63	2,753
Porto do Pecém Geração de Energia S.A.	924	2,355	-	3,498	-	(10,156)	852	(2,527)
MPX Pecém II Geração de Energia S.A	-		-	-	-	(7)	11	4
Amapari Energia S.A.	1,537	4,405	18,150	1,487	4,599	243	378	30,799
UTE Porto do Açu Energia S.A.	1,277	2,131	-	-	1,496	24,946	2,753	32,603
Seival Sul Mineração Ltda.	225	3,067	-	-	754	-	-	4,046
UTE MPX Sul Energia Ltda.	101	505	-	-	17	-	35	658
UTE Porto do Itaqui Geração de Energia S.A	689	4,599	-	212	-	(17,122)	2,808	(8,814)
MPX Áustria GmbH	-	57	-	-	-	-	-	57
MPX Energia de Chile Ltda	1,155	4,888	580	-	-	(143)	61	6,541
MPX Colômbia S.A	88	11,220	-	-	-	(24)	86	11,370
Termopantanal Participações Ltda.	321	2,423	801	-	2,954	-	(424)	6,075
	6,466	38,174	19,531	5,197	9,820	(2,246)	6,623	83,565

14 Related-party transactions

The main balances of assets and liabilities as of December 31, 2009 , as well as the transactions that influenced the income for the period, relate to related party transactions, resulting from transactions between the Company and its direct and indirect subsidiaries, affiliates and key management personnel, which were conducted at arm's length.

Controlling Shareholder

The share control of MPX Energia S.A. is held by Mr. Eike Fuhrken Batista, who owns 70.40% of the common stock. MPX Energia S.A. is managed by a Board of Directors and an Executive Board, pursuant to the attributions and powers awarded by its Bylaws in accordance with corporate legislation.

Affiliated Companies

The main affiliated companies of MPX Energia S.A. are: EBX Investimentos Ltda., OGX Petróleo e Gás Participações S.A., LLX Logística S.A. and MMX Mineração e Metálicos S.A.

As of December 31, 2009 the balances of assets, liabilities and effects on income are as follows:

	Assets			
	Parent Company		**Consolidated**	
	2009	**2008**	**2009**	**2008**
Amapari Energia S.A. **(a)**	27,931	19,710	-	-
Porto do Pecém Geração de Energia S.A	-	247	-	-
UTE Porto do Açu Energia S.A.	277	-	-	-
UTE Porto do Itaqui Geração de Energia S.A	299	-	-	-
Termopantanal Ltda. **(b)**	6,250	-	-	-
MPX Colômbia S.A.	-	1,182	-	-
Termopantanal Participações Ltda. **(b)**	397	5,968	-	-
REX Investimentos S.A	-	-	117	-
OMX Operações Marítimas Ltda	-	-	1,395	-
MMX Chile S.A	-	-	72	-
Noncurrent	35,154	27,107	1,584	-

	Liabilities			
	Parent Company		Consolidated	
	2009	**2008**	**2009**	**2008**
EBX Investimentos Ltda. (c)	1,513	1,708	1,748	2,023
MMX Mineração e Metálicos S.A.(C)	187	49	187	49
UTE MPX Sul Energia Ltda.	1	1	-	-
MPX Comercializadora de Energia Ltda.	1	1	-	-
EDP Energias do Brasil S.A.	-	-	31	101
	1,702	1,759	1,966	2,173
Current	1,700	1,757	1,966	2,173
Noncurrent	2	2	-	-

	P&L			
	Parent Company		Consolidated	
	2009	**2008**	**2009**	**2008**
Amapari Energia S.A.	2,779	4,256	-	-
UTE Porto do Açu Energia S.A.	277	90	-	-
UTE Porto do Itaqui Geração de Energia S.A	299	310	-	-
Termopantanal Ltda.	512	89	-	-
Seival Sul Mineração Ltda	-	115	-	-
Porto do Pecém Geração de Energia S.A	-	22	-	-
MPX Sul S.A	-	9	-	-
Termopantanal Participações Ltda.	36	191	-	-
EBX Investimentos Ltda	(10,691)	(6,023)	(12,721)	(6,023)
Total	(6,778)	(941)	(12,721)	(6,023)

(a) Loan agreement executed with MPX Energia S.A. (lender) subject to monthly interest (125% of CDI) and with a fixed term of maturity. As of December 31, 2009, the effect on the income statement was R$2,779.

(b) Loan agreement executed with MPX Energia S.A. (lender) subject to monthly interest (125% of CDI) and with a fixed term of maturity. As of December 31, 2009, the effect on the income statement was R$36. MPX Energia S.A. has made a provision for the devaluation of its 66.67% investment in Termopantanal Participações Ltda., as per Note 10n.

(c) The Company and its subsidiaries also have operational and financial sharing agreements with the companies EBX Investimentos Ltda. and MMX Mineração e Metálicos S.A., involving monthly collections made through trade notes paid according to negotiations between the parties (average of 30 to 60 days).

The remuneration of key management staff has been presented below:

	Parent Company		Consolidated	
	2009	**2008**	**2009**	**2008**
Immediate benefits				
Salaries	3,773	3,513	4,328	4,824
Bonuses	-	210	52	-
Stock options awarded	2,095	3,668	2,095	3,668
	5,868	7,391	6,475	8,492

15 Loans and financing

As of December 31, 2009 the loans taken out from financial institutions break down as follows:

				Consolidated									
				2009							2008		
Creditor		**Currency**	**Interest rates**	**Maturity**	**Effective rate**	**Transaction cost**	**Unapproriated cost**	**Principal**	**Interest**	**Total**	**Principal**	**Interest**	**Total**
Banco Citibank	**(a)**	R$	CDI + 3p.a.	-	-	-	-	-	-	-	12,000	-	12,000
Banco Citibank	**(a)**	USD	*LIBOR* + 3p.a.	-	-	-	-	-	-	-	161,253	376	161,629
Banco Citibank	**(a)**	R$	CDI + 3p.a.	-	-	-	-	-	-	-	84,000	988	84,988
Banco Citibank	**(a)**	USD	*LIBOR* + 3p.a.	-	-	-	-	-	-	-	23,370	54	23,424
Banco HSBC	**(b)**	R$	111% CDI	-	-	-	-	-	-	-	41,900	2,004	43,904
Banco Itaú BBA	**(c)**	USD	4.95% p.a.	01/05/2010	-	-	-	121,884	33	121,917	163,590	1,754	165,344
Banco Itaú BBA	**(d)**	USD	5% p.a.	-	-	-	-	-	-	-	47,974	1,205	49,179
Banco Votorantim	**(e)**	USD	5.10% p.a.	01/05/2010	-	-	-	69,648	20	69,668	93,480	5,459	98,939
Banco Votorantim	**(f)**	USD	5.10% p.a.	01/05/2010	-	-	-	87,060	25	87,085	116,850	6,610	123,460
Banco Votorantim	**(g)**	USD	4.50% p.a	-	-	-	-	-	-	-	116,850	3,190	120,040
Banco Citibank	**(h)**	R$	CDI+4.50% p.a.	04/26/2010	CDI + 6.57%	6,714	1,825	305,000	6,980	310,155	-	-	-
BNDES (Direct)	**(i)**	R$	TJLP+2.78%	06/15/2026	TJLP + 3.67%	13,199	13,199	315,479	142	302,422	-	-	-
BNB	**(j)**	R$	10% p.a.	06/15/2026	11%p.a	3,355	3,355	99,021	52	95,718	-	-	-
BNDES (Direct)	**(k)**	R$	TJLP+2.77%	06/15/2026	TJLP + 2.95%	8,420	8,294	355,104	1,329	348,139	-	-	-
BID	**(l)**	USD	LIBOR+3.5p.a.	05/15/2026	Libor + +4.29%	6,952	6,884	101,908	513	95,537	-	-	-
BID	**(m)**	USD	LIBOR+3.0p.a.	05/15/2022	Libor + 3.77%	6,670	6,605	124,785	550	118,730	-	-	-
						45,310	**40,162**	**1,579,889**	**9,644**	**1,549,371**	**861,267**	**21,640**	**882,907**

	Principal	**Transaction cost**	**Interest**	**Total**	**Principal**	**Interest**	**Total**
Current	583,592	(1,825)	1,063	589,889	861,267	21,640	882,907
Noncurrent	996,297	(38,337)	8,581	959,482	-	-	-

(a) In the first half of 2008 Porto do Pecém Geração de Energia S.A. obtained local-currency bridge loans from Banco Citibank amounting to R$192,000 (equal to USD 158,000). These loans were settled in October 2009 using long-term funding (BNDES and IBD). The balance of the principal and interest stated in the table for 2008 above refer to 50% of the original balances, and take into account the elimination of the 50% interest of EDP Energias do Brasil S.A.

(b) UTE Porto do Açu Energia S.A. obtained a local-currency working capital loan of R$41,900 from Banco HSBC on September 03, 2008, maturing on September 03, 2009. The loan was settled at maturity.

(c) On March 28, 2008 UTE Porto do Itaqui Geração de Energia S.A. obtained a foreign-currency working capital loan of USD70,000,000 (R$121,884 as of December 31, 2009) from Banco Itaú. This loan was settled after the close of FY 2009, on January 05, 2010, using long-term funding (BNDES and BNB).

(d) On September 03, 2008 UTE Porto do Itaqui Geração de Energia S.A. obtained a foreign-currency working capital loan of USD20,528,000 (R$47,974 as of December 31, 2008) from Banco Itaú. This loan was settled on December 09, 2009 using long-term funding (BNDES and BNB).

(e) On March 14, 2008 UTE Porto do Itaqui Geração de Energia S.A. obtained a foreign-currency working capital loan of USD40,000,000 (R$69,648 as of December 31, 2009) from Banco Votorantim. This loan was settled after the close of FY 2009, on January 05, 2010, using long-term funding (BNDES and BNB).

(f) On March 13, 2008 UTE Porto do Itaqui Geração de Energia S.A. obtained a foreign-currency working capital loan of USD50,000,000 (R$87,060 as of December 31, 2009) from Banco Votorantim. This loan was settled after the close of FY 2009, on January 05, 2010, using long-term funding (BNDES and BNB).

(g) On September 05, 2008 UTE Porto do Itaqui Geração de Energia S.A. obtained a foreign-currency working capital loan of USD50,000,000 (R$116,850 as of December 31, 2008) from Banco Votorantim. This loan was settled on December 09, 2009 using long-term funding (BNDES and BNB).

(h) To partly fund the implementation of the UTE Porto do Pecém project (stage II), the subsidiary executed contracts relating to the bridge loan with Banco Citibank, as lead bank, and a syndicate of banks consisting of Banco do Brasil, Banco Espírito Santo, Grupo Banco Comercial Português, ING Bank and West LB. This is a local currency loan of R$305,000, charged interest of CDI + 4.50% p.a. The interest is paid quarterly and the principal matures on April 26, 2010.

The company opened an escrow account at Citibank as a result of taking out the loan. The entire proceeds of this Credit Facility have been deposited in this account. The deposits made in this account can be invested in short-term investment funds ("permitted investments") with daily liquidity, administrated by Brazilian financial institutions and bonds issued by the federal government and/or Brazilian financial institutions. On December 31, 2009 all the funds were used in the UTE Porto do Pecém project (stage II).

(i) On December 29, 2009 the National Social and Economic Development Bank ("BNDES") released the first part (R$315,479) of a long-term loan to UTE Porto do Itaqui Geração de Energia S.A. The amount released enabled the settlement of bridge loans from Votorantim and Itaú, as explained above. The contracted cost is LTIR + 2.78 p.a.

(j) To top up the funding from the BNDES, UTE Porto do Itaqui Geração de Energia S.A took out a loan from BNB-FNE, worth a total R$203,000 (nominal in R$), of which R$99,021 was disbursed on December 29, 2009. The BNB loan has a total term of 17 years, with 14 years repayment and a grace period on the principal of until July 2012. It is charged interest of 10% p.a. The funding has a performance bonus (15%), which will most probably reduce the cost to 8.5% p.a.

UTE Porto do Itaqui Geração de Energia S.A has the following guarantees: assets linked to mortgages, statutory lien on machinery and equipment, statutory assignment of emerging authorization rights, share pledge, statutory assignment of credit receivables, conditional assignment of receivables and contracts and liquid funds in reserve accounts.

(k) On October 14, 2009 the National Social and Economic Development Bank ("BNDES") released the first part (R$700 million) of a long-term loan to Porto do Pecém Geração de Energia S.A. The BNDES financing agreement involves a loan of R$1.4 billion (in nominal R$, excluding interest during the construction), with a total term of 17 years, including 14 years for amortization and a grace period for payment of interest and principal of until July 2012. The contracted cost is LTIR + 2.77 p.a. The interest will be capitalized during the construction phase. The balance of the principal and interest stated in the table above refer to 50% of the original balances, and take into account the elimination of the 50% interest of EDP Energias do Brasil S.A.

(l) To top up the direct loan from the BNDES, Porto do Pecém Geração de Energia S.A will take out a direct loan from the Interamerican Development Bank – BID ("A loan"), worth a total USD 147 million, of which USD 117 million was disbursed on October 30, 2009 (equal to R$95,537 as of December 31, 2009) at the cost of Libor + 3.5% p.a. Loan A has a total term of 17 years, with 14 years repayment and a grace period on the principal of until July 2012.

(m) To top up the direct loan from the BNDES, Porto do Pecém Geração de Energia S.A will take out an indirect loan from the Interamerican Development Bank – BID ("B loan"), worth a total USD 180 million, of which USD 143 million was disbursed on October 30, 2009 (equal to R$118,730 as of December 31, 2009) at the cost of Libor + 3.0% p.a. The onlending banks are: Grupo Banco Comercial Português, Calyon and Caixa Geral de Depósito. Loan B has a total term of 13 years, with 10 years repayment and a grace period on the principal of until July 2012.

Porto do Pecém Geração de Energia S.A. entered into a receivables and credits statutory assignment agreement by which it implemented the statutory assignment and transfer, to the extent permitted by the applicable law and on an irrecoverable and irreversible basis, to the BNDES and IDB of the statutory ownership and indirect ownership of:

(i) all the receivables and credits of Borrower under each instrument, and any indemnification rights deriving from the expiry of the generation and sale permit

(ii) all receivables and credits held by the Shareholders in relation to the Subordinated Loan Agreements, when

(iii) Borrower's rights over all the intellectual property required for the Project, which it becomes the owner of at any time

(iv) All instruments, certificates, letters of credit, letters of guarantee and collection documents that evidence, represent, assure or in any way guarantee the payment of any credit receivables deriving from or related to them, including but not limited to promissory notes, invoices, trade bills, bills of exchange, credit titles and foreign exchange contracts, and

(v) all current and future receivables and credits of Borrower and MPX under the project accounts, with the exception of the Borrower's local account, including but not limited to all credit receivables of Borrower or MPX, as the case may be, by virtue of amounts deposited in the project accounts, and investments made with deposits therein and the resulting gains and yields, and respective certificates and documents representing such investments.

In addition to the receivables and credits statutory assignment agreement, the Company has also established the following guarantees:

I - Mortgage
II - Share Pledge
III - Conditional Assignment of Receivables and Contracts
V - Statutory Lien on Assets and Equipment
VI - Promissory Notes

Except for the financing loans of the BNDES and the Inter-American Development Bank – BID and the bridge loan, these loans are not subject to covenants and do not incur transaction costs considered material by Technical Pronouncement CPC 08, approved by CVM Resolution 556/08. We did not detect any nonperformance of loans subject to covenants as of December 31, 2009.

The portions classified in non-current liabilities have the following payment schedule:

	Consolidated
Maturity	**2009**
2009	-
2010	34,170
2011	-
2012	30,284
2013	64,998
2014	66,483
2015 to final maturity	763,547
Total	959,482

16 Taxes and contributions payable

	Parent Company		**Consolidated**	
	2009	**2008**	**2009**	**2008**
Corporate Income Tax – IRPJ	20,271	26,325	20,664	26,473
Social Contribution on Net Income - CSLL	7,476	9,685	8,013	9,728
Income Tax Withheld at Source - IRRF	18	24	136	74
ICMS	15	-	330	48
PIS, COFINS, IRRF and CSL	45	325	539	793
Tax on Financial Transactions - IOF	40	86	40	86
Other	60	164	2,769	638
	27,925	36,609	32,491	37,840

As of December 31, 2009 the taxes calculated on the adjusted net income consisted of IRPJ (rate of 15% and surcharge of 10%) and CSLL (rate of 9%). The reconciliation between the tax expense as calculated by the combined statutory rates and the income and social contribution tax expense charged to net income is presented below:

	Parent Company	
	2009	**2008**
Net Income (loss) before IRPJ/CSLL	(132,027)	242,301
Nominal rate	34%	34%
IRPJ/CSLL at the nominal rate	44,889	(82,382)
Provision for devaluation of investments	-	(2,833)
Equity in net income of subsidiaries and associated companies	(40,319)	55
Provision for unsecured liabilities	(12,661)	-
Donations	(640)	(202)
Unsettled hedge losses	(27,118)	31,962
Provision for hedge gains	(7,332)	-
Reversal of provision for investment devaluation	2,833	166
Other	24	577
Roaunet Law Donations	473	-
Effect of the initial implementation of Law 11638 - Management remuneration consisting of stock options	-	(1,247)
Carryforward of tax losses and negative CSL base	12,104	15,681
Income tax and social contribution expenses	(27,747)	(38,223)
Effective rate	21.02%	15.78%

	Consolidated	
	2009	**2008**
Net Income (loss) before IRPJ/CSLL **(a)**	(214,111)	242,301
RTT Adjustment **(b)**	238,878	-
Book income adjusted for the effects of Law 11941 of 2009	24,767	-
Nominal rate	34%	34%
IRPJ/CSLL at the nominal rate	(8,421)	(82,382)
Provision for investment devaluation	-	(2,833)
Equity in net income of subsidiaries and associated companies	-	-
Donations	(640)	(202)
Unsettled hedge losses	(34,449)	32,222
Reversal of provision	2,833	166
Other	24	163
Effect of the initial implementation of Law 11638 - Management remuneration consisting of stock options	-	(1,247)
Roaunet Law Donations	473	-
Carryforward of tax losses and negative CSL base	12,132	15,681
Income tax and social contribution expenses	(28,048)	(38,432)
Effective rate	13.10%	15.86%

(a) The reconciliation of the IRPJ and CSLL in the income statement and the amount determined by applying these rates to the consolidated book income before these taxes embraces all the subsidiaries, except the subsidiary Amapari Energia S.A., because it has been calculating its income on the presumed profit method since January 2009.

(b) Adjustment mainly deriving from the reclassification of the deferred assets to the income statement and the preoperational expenses recorded in the income statement of the companies that have not come into operation.

On December 31, 2009, the calculation base for determination of income and social contribution taxes payable was deducted from the pre-operating expenses pursuant to Dispute Resolution 32 of July 21, 2008 of the Federal Internal Revenue Department, generating a negative basis; consequently the subsidiary Porto do Pecém Geração de Energia S.A. did not form provision for these taxes.

For FY 2009 the subsidiary Amapari Energia S.A. decided to use an option provided by Brazilian tax legislation for taxable income to be calculated at the rate of 8% (12% for social contribution) of operating income plus 100% of other income. In this scheme, temporary differences cannot be utilized for purposes of income tax and tax loss and cannot be accumulated for offsetting in subsequent periods.

The income and social contribution taxes reported in these financial statements, reconciled against the amount obtained by applying the statutory tax rates to the taxable income of Amapari Energia S.A., are as follows:

	2009
Revenues	62,836
Calculation base (8% for income tax)	5,027
Other taxable revenue	305
Taxable income for the purpose of income tax	5,332
Federal income tax at the official rate (15% plus 10% for taxable income in excess of R$240,000)	1,309

	2009
Calculation base (12% for income tax)	7,541
Other taxable revenue	305
Taxable income for the purpose of social contributions	7,846
Federal social contributions at the official rate (9%)	706

17 Financial instruments

By way of its subsidiary MPX Energia S.A and its subsidiaries Porto do Pecém Geração de Energia S.A., UTE Porto do Itaqui Geração de Energia S.A., UTE Porto do Açu Geração de Energia S.A., MPX Pecem II Geração de Energia S.A. and MPX Comercializadora de Combustíveis Ltda., MPX Group has financial derivatives for hedging purposes against foreign exchange, interest rate (*Libor*) and commodities (coal) risks. The management of these instruments is done through operating strategies and internal controls, aimed at liquidity, profitability and security.

The control policy consists of permanent monitoring of the contracted conditions versus the existing conditions on the market. MPX Energia S.A. and its subsidiaries do not invest in derivatives or any other risky assets on a speculative basis. The results obtained from these operations are consistent with the policies and strategies defined by MPX Energia S.A. and its subsidiaries.

Hedge Accounting

The investment in Capex of its subsidiary Porto do Pecém Geração de Energia S.A. (construction of the thermal power plant) will consist of 75% long-term financing in US dollars and 25% of company capital. The long-term financing agreements were signed with the Inter-American Development Bank ("BID") and the National Social and Economic Development Bank ("BNDES") on July 10, 2009, as per Note 15. To finance its Capex requirements in the period prior to July 10, 2009 it was necessary to take out a bridge loan from Citibank, which will be repaid using funds provided under said financing agreements, as per Notes 15b and 15d.

As most of the investment is denominated in US dollars and Euros and its future revenue will be generated in Brazilian reais, derivative instruments have been taken out for hedge purposes. On April 01, 2009 the Company used hedge accounting in order to hedge against the exchange variance on the long-term US dollar financing loans taken out from IDB and BNDES. The derivative instrument used is an NDF maturing in October 2012 with a notional value of USD 327,000.

As this is hedge accounting classified as cash flow, changes in the fair value of derivative instruments designated as cash flow hedges are recognized directly in shareholders' equity for the amount of the hedge that is considered effective. The difference between the fair value and the exchange variance is the ineffective portion which is therefore recognized in the income statement.

This bridge loan was settled on October 30, 2009. USD 260 million was released on this date consisting of the first part of the long-term funding from BID and the adjustment to present value (AVP) was calculated based on the USD 67 million yet to be disbursed by the BID.

The item covered by this financial instrument for the purpose of hedge accounting also has the following features:

- The project is being implemented and expected to be finalized in 2011
- The covered item is associated with said investment (made public by the company)
- The public investment is of material value to Brazil
- USD 158 million was originally contracted (80% of the total item covered), and the amounts now stands at USD 260 million.

The impact of the gains and losses of the hedge accounting transactions in the year was as follows:

	Consolidated	
	2009	
	P&L	Shareholders' equity
Hedge derivatives		
Derivative gains/(losses)	(96,251)	(31,763)

The subsidiaries' operations are subject to the risk factors described below:

Credit risk

This arises from the possibility of MPX Energia S.A. and its subsidiaries incurring losses owing to default by their counterparts or by financial institutions holding deposits or financial investments.

To mitigate these risks, MPX Energia S.A. and its subsidiaries have a policy of analyzing the financial position of their counterparties, as well constantly monitoring outstanding accounts. With respect to financial institutions, MPX Energia S.A. and its subsidiaries only conduct transactions with low risk financial institutions as assessed by rating agencies.

Interest rate risk

This arises from the possibility of MPX Energia S.A. and its subsidiaries sustaining gains or losses arising from fluctuations in interest rates on their financial assets and liabilities. In order to mitigate this kind of risk, MPX Energia S.A. and its subsidiaries seek to diversify the raising of funds in terms of prefixed and floating rates, and in certain circumstances hedges are utilized to lock-in the financial cost of the operations.

Exchange rate risk

This arises from the possibility of fluctuations in the exchange rates of the foreign currencies used by MPX Energia S.A. and its subsidiaries to purchase equipment and financial instruments. MPX Energia S.A. and its subsidiaries permanently assess the utilization of hedges to mitigate these risks.

Risk of oscillation in commodity prices

This arises from the possibility of oscillations in international prices for the coal used by MPX Energia S.A. and its subsidiaries to acquire raw material (fuel for coal power stations). MPX Energia S.A. and its subsidiaries permanently assess the utilization of hedges to mitigate these risks. MPX Comercializadora de Combustíveis Ltda. took out a domestic hedge in order to mitigate the risk of oscillation in coal prices. This subsidiary of MPX Energia S.A. will be responsible for supplying fuel to the thermal power plants. The risk to its balance sheet will therefore be hedged by forward purchases of coal without physical delivery and a forward purchase in dollars without physical delivery, as the receipts will be denominated in local currency (Brazilian reais).

Capital structure risk (or financial risk)

This arises from the choice between equity capital (financial resources provided by shareholders and retaining of profits) and third-party capital that MPX Energia S.A. and its subsidiaries use to finance their operations. To mitigate liquidity risks and to optimize the weighted average cost of capital, MPX Energia S.A. and its subsidiaries permanently monitor the level of indebtedness in accordance with market standards.

In certain circumstances hedges are used to avoid fluctuations in the financial cost of the operations.

Non-derivative and derivative financial instruments

The following table presents all the operations with derivative financial instruments and nonderivative financial instruments, as well as the respective fair values calculated by MPX Energia S.A. and its subsidiaries.

	Parent Company					
	2009			2008		
Financial Instruments	**Fair value through P&L**	**Amortized cost**	**Total**	**Fair value through P&L**	**Amortized cost**	**Total**
Assets						
Cash and banks	272	-	272	123	-	123
Short-term investments	912,751	-	912,751	1,640,678	-	1,640,678
Related-party transactions	-	35,154	35,154	-	27,107	27,107
Gain on derivative transactions (currer and noncurrent)	53,611	-	53,611	94,006	-	94,006
Liabilities						
Suppliers	-	3,135	3,135	-	1,814	1,814
Related-party transactions	-	1,702	1,702	-	1,759	1,759
Losses on derivative transactions	60,925	-	60,925	-	-	-

	Consolidated					
	2009			2008		
Financial Instruments	**Fair value through profit and loss**	**Amortized cost**	**Total**	**Fair value through profit and loss**	**Amortized cost**	**Total**
Assets						
Cash and banks	386,333	-	386,333	10,885	-	10,885
Short-term investments	1,252,400	-	1,252,400	1,847,907	-	1,847,907
Accounts receivable	-	6,295	6,295	-	8,576	8,576
CCC Subsidy receivable	-	5,445	5,445	-	5,878	5,878
Related-party transactions	-	1,584	1,584	-	-	-
Gains on derivative transactions	678,647	-	678,647	260,741	-	260,741

	Consolidated					
	2009			2008		
Liabilities						
Loans and financing in R$	-	(1,056,434)	(1,056,434)	-	(140,892)	(140,892)
Loans and financing in USD	-	(492,937)	(492,937)	-	(742,015)	(742,015)
Suppliers		34,006	34,006		34,238	34,238
Related-party transactions	-	1,966	1,966	-	2,173	2,173
Contractual retentions	-	210,646	210,646	-	110,843	110,843
Losses on derivative transactions	(855,815)	-	(855,815)	(165,971)	-	(165,971)

a. Cash and cash equivalents

Current accounts held in banks have market values identical to the book values.

For interest-earning bank deposits, the market value was calculated based on the market quotations of these securities on December 31, 2009 and 2008.

Interest earning bank deposits are held in exclusive funds managed by a financial institution and backed by federal government securities and private securities ("CDB") of prime financial institutions, as well as private securities (Debentures) issued by companies and financial institutions, with average yield slightly higher than the DI CETIP (Interbank Deposit Certificate - CDI).

These balances are stated at fair value through profit or loss, as provided for by CPC14 - Financial Instruments: Recognition, Valuation and Disclosure approved by CVM Deliberation 566/08 and revoked by CVM Resolution 604.

b. Related-party transactions

These balances are classified as financial liabilities not measured at fair value and are recognized at their amortized cost, as provided for by CPC14 approved by CVM Deliberation 566 and revoked by CVM Resolution 604.

c. Trade accounts receivable and subsidies receivable - CCC

These balances are classified as loans and receivables and are recognized by their amortized cost, as provided for by CPC14 approved by CVM Deliberation 566 and revoked by CVM Resolution 604.

d. Contractual retentions

These balances are classified as financial liabilities not measured at fair value and are recognized at their amortized cost, as provided for by CPC14 approved by CVM Deliberation 566 and revoked by CVM Resolution 604.

e. Loans and financing

These balances are classified as financial liabilities not measured at fair value and are recognized at their amortized cost, as provided for by CPC14 approved by CVM Deliberation 566 and revoked by CVM Resolution 604.

f. Suppliers

These balances are classified as financial liabilities not measured at fair value and are recognized at their amortized cost, as provided for by CPC14 approved by CVM Deliberation 566 and revoked by CVM Resolution 604.

g. Derivative financial instruments

The estimated fair value of the derivative financial instruments held by MPX Energia S.A. and its subsidiaries was determined through information available in the market and specific valuation methodologies. However, considerable judgment was required to interpret the market data in order to produce the estimated fair value for each operation. Consequently, the following estimates do not necessarily indicate the amount that will be effectively realized upon the financial settlement of the operations.

MPX Energia S.A. and its subsidiaries have a risk control policy for purchasing financial derivative instruments, as their revenue is many obtained in Brazilian reais and most of their investments in fixed assets (Capex) are denominated in US dollars and Euros. A portion of their foreign currency investments will be funded at international interest rates (*Libor).* Furthermore, the prices of the raw material for the thermal power plants (coal fuel) are determined in the offshore market. This policy allows them to assess the aforesaid assets' exposure level and procure the required hedge instruments, thereby avoiding possible mismatches between revenue and expenses.

MPX Energia S.A. and its subsidiaries accordingly purchased NDFs (Non Deliverable Forwards), which consist of forward trading without physical delivery of currency to minimize the impact of exchange mismatching, and the FRA Libor Swap (Forward Rate Agreement), which consists of fixing a forward interest rate for long-term loans. Operations which fixed the price of coal were taken out to mitigate the exposure to coal prices. The latter operation was conducted in Brazil with the aforesaid bank, without the need to incorporate an offshore company. The hedge policy of MPX Energia S.A. and its subsidiaries does not allow any speculative leverage. The hedge volumes are procured according to the exposure level, always subject to the best governance practices in the market.

The existing derivative operations used by MPX Energia S.A. and its subsidiaries do not require a margin guarantee to be deposited.

MPX Energia S.A. had non-deliverable forwards in its balance sheet in the first quarter of 2009. These operations were contracted in the balance sheet of the listed company in order to hedge the investments made in the subsidiary MPX Pecem II Geração de Energia S.A. Unremunerated derivatives were therefore assigned throughout the second quarter of 2009 (with no effect on cash) by and between MPX Energia S.A. and MPX Pecem II Geração de Energia S.A. At the end of August 2009 MPX Energia S.A. carried out similar operations in order to hedge part of its investments in the subsidiary Porto do Pecem Gereção de Energia S.A.

Under the policy implemented by MPX Energia S.A. and its subsidiaries, the maximum potential loss (Parametric VaR – See Glossary) is calculated daily on its derivative operations, based on statistical methods that allow the assumed exposure to be controlled.

The formula for calculating the mark-to-market of long positions in US dollars and short positions in Brazilian reais is as follows:

Initial step: quantifying the asset or liability exposure to be covered by an NDF contract.

- Step 1: The derivative's value in US dollars multiplied by the original dollar exchange rate in the contract. Based on the figure in reais and the interest curve prices pre-traded on BM&FBOVESPA S.A.- Stock, Commodities and Futures Exchange, the calculated amount is obtained over the term in working days that remains before the operation expires and

- Step 2: The derivative's value in US dollars is restated to present value by the Currency Coupon Curve Traded at BM&FBOVESPA for the equivalent term in current days to the operation. After this calculation, the dollar amount is multiplied by the closing Ptax-800 rate for the corresponding month published by the Brazilian Central Bank - BACEN.

The *MtM* value in reais is the difference between steps 1 and 2, where the values of the pre-curves (step 1) and currency coupon (step 2) are obtained at the close of the reporting month.

The formula for calculating the mark-to-market of long positions in Euros and short positions in Brazilian reais is as follows:

Initial step: quantifying the asset or liability exposure to be covered by an NDF contract.

- Step 1: Quantify the number of days remaining before the operation expires, from the base date - 12/31/2009. Based on the number of days determine the rate that comprises the structure of the forward interest curve (External Euro Coupon Curve). Use the notional amount in Euros and discount it at the factor calculated on the number of days. Finally, multiply the result by the Ptax BRL/EURO rate and

- Step 2: Quantify the number of days remaining before the operation expires, from the base date - 12/31/2009. Based on the number of days determine the rate that comprises the structure of the forward interest curve (Treasury Yield Curve). Use the notional amount in Euros, multiply it by the NDF rate procured to determine the amount in dollars and discount it at the factor calculated on the number of days. Finally, multiply the result by the Ptax BRL/USD rate.

The MtM value in reais is the difference between steps 1 and 2.

The formula for calculating the mark-to-market of long positions with variable to fixed interest rates is as follows:

Initial step: Quantifying the exposure to be covered by a Forward Rate Agreement in Libor – Floating to Fixed Libor FRA

The derivative's flow value at a floating rate is restated to present value by the Interpolation of the Treasury Swap Factor against the Libor for one year. Each amortization amount is charged simple interest at the above factor until maturity. It is lastly discounted at the market rate fixed by the parties in the derivatives agreement. The amount obtained is ultimately multiplied by the Ptax-800 rate published by BACEN.

The formula for calculating the mark-to-market of CDI/USD Swaps is as follows:

Initial step: Quantifying the exposure to be covered by a Swap agreement

- Step 1: The derivative's value in US dollars is converted to reais at the original exchange rate. Based on this amount the spread is applied to the CDI in working days and the forward value of this position is determined in reais. Based on the future value, the present value is obtained at the Brazil interest curve added to the same spread used originally and

- Step 2: The derivative's value in US dollars is applied to the interest rate (coupon) to obtain the Forward Value. This value is used to determine the present value of the Currency Yield Curve. This amount is finally converted into reais at the Ptax-800 exchange rate at the close of the month.

The MtM value in reais is the difference between steps 1 and 2.

The formula for calculating the mark-to-market of fixed-price positions (lock-in) is as follows:

In order to outline the main risk factors (currencies and coal) which comprise the local operation, in conjunction with the Map of Risk Solutions a 10-year spot coal curve was produced according to the following method:

The following assumption was made to calculate the spot coal price to initiate the curve:

From the first future screen – month one - traded in the offshore market, a discount rate (Libor) is applied to obtain the spot coal price, as this information is restricted to buyers and sellers of physical coal (coal for delivery).

The ratio between the spot coal price and future screens is then calculated to establish the following vertices. This calculation will result in a spot rate that will comprise the structure of the forward coal curve.

There is a ratio between the future screens and their respective maturities at some point in the future, where the bootstrap method is used to exponentially extrapolate these vertices which comprise the Spot Curve and which will be used for the settlement of these operations.

The fact this operation is conducted in Brazil means there are two mismatches:

i. Currencies, but this risk has been mitigated by an NDF operation in which the Company went long in US dollars and short in Brazilian Reais to an equivalent amount in tons.

ii. Coal: the prices are fixed by a swap where the Company fixes the prices for delivery and these prices are marked-to-market against the aforesaid forward curve.

Initial step: Quantifying the exposure to be covered by a fixed-price local position (lock-in) for coal:

- Step 1: The price in tons/US dollars is fixed for the dates when the Company will receive the physical material at its plant, and

- Step 2: The fixed price is compared against the price the spot curve calculated for the equivalent period.

The MtM value in dollars will be the difference in the prices fixed in US dollars multiplied by the amount of tons fixed. Finally, multiply the result by the Ptax BRL/USD rate.

The resulting amount in Brazilian Reais will be the sum of the MtM of the coal operations and the MtM of the NDFs with no physical delivery.

Table 1 = Derivative financial instruments: USD and SWAP LIBOR

	Maturity	Notional Amount (USD k)		Value of *MtM* (BRL k)		Accumulated Effect Current Period	
						Receivable (BRL k)	Payable (BRL k)
		2009	2008	2009	2008	2009	2009
UTE PORTO DE ITAQUI							
NDF contracts (i)							
Long Position							
USD/BRL	Jan/10 to Oct/12	184,190	271,858	(22,123)	90,995	-	(22,123)
Libor Swap Contracts (ii)							
Receivable Position							
Libor	Oct/17	228,652	228,652	386,393	503,150	386,393	-
Liability Position							
Fixed	Oct/17	228,652	228,652	(408,245)	(589,596)	-	(408,245)
PORTO DO PECEM							
NDF contracts (iii)							
Long Position							
USD/BRL	Jan/10 to Oct/12	189,740	203,368	(33,284)	68,179	-	(33,284)
Libor Swap Contracts (ii)							
Receivable Position							
Libor	Oct/17	163,500	167,091	276,288	367,684	276,288	-
Liability Position							
Fixed	Oct/17	163,500	167,091	(291,877)	(430,740)	-	(291,877)
IDC Swap Contracts (ii)							
Receivable Position							
Libor	Nov/11	624,644	-	7,692	-	7,692	-
Liability Position							
Fixed	Nov/11	624,644	-	(11,404)	-	-	(11,404)
MPX PECEM II							
NDF contracts (iii)							
Long Position							
USD/BRL	Jan/10 to Oct/12	106,399	240,304	(42,370)	80,229		(42,370)
UTE PORTO DO AÇU							
Swap Contracts							
Receivable Position							
% CDI	Sep/09	-	25,000	-	44,130	-	-
Liability Position							
BRL/USD + fixed	Sep/09	-	25,000	-	(60,599)	-	-

Consolidated Total	**(138,930)**	**73,432**	**670,373**	**(809,303)**

(i) The NDF Contracts (Non Deliverable Forwards) were signed with the following financial institution: Banco Citibank S/A and Morgan Stanley.

(ii) The Swap Libor Contracts were signed with the following financial institution: Banco Citibank S/A.

(iii) The NDF Contracts (Non Deliverable Forwards) were signed with the following financial institution: Banco Citibank S/A.

For existing derivative financial instruments there is no relationship with foreign exchange options and no security margin requirement established therein.

The operations are duly registered at CETIP S/A and BM&F (Sao Paulo Futures and Commodities Exchange).

Table 2 = Derivative financial instruments: Euro

		Notional Amount (€ k)		Value of *MtM* (BRL 000)		Accumulated Effect Current Period	
						Receivable (BRL k)	Payable (BRL k)
	Maturity	2009	2008	2009	2008	2009	2009
UTE PORTO DE ITAQUI							
NDF contracts (i)							
Long Position							
EUR/USD	Jan/10 to Dec/11	16,916	26,455	1,059	7,561	1,059	-
PORTO DO PECEM							
NDF contracts (ii)							
Long Position							
EUR/USD	Jan/10 to Jan/12	12,366	-	504	-	504	-
NDF contracts (iii)							
Long Position							
EUR/BRL	Jan/10 to Jan/12	4,809	-	(1,652)	-	-	(1,652)
MPX PECEM II							
NDF contracts (iv)							
Long Position							
EUR/USD	Jan/09 to Mar/11	25,174	61,173	6,711	13,777	6,711	-
Consolidated Total		**59.265**	**87,628**	**6,622**	**21,338**	**8,274**	**(1,652)**

(i) The NDF Contracts (Non Deliverable Forwards) were signed with the following financial institutions: Banco Citibank S/A and Morgan Stanley.

(ii) The NDF Contracts (Non Deliverable Forwards) were signed with the following financial institutions: Banco Citibank S/A and BTG Pactual.

(iii) The NDF Contracts (Non Deliverable Forwards) were signed with the following financial institution: Banco BTG Pactual.

(iv) The NDF Contracts (Non Deliverable Forwards) were signed with the following financial institution: Banco Citibank S.A

Derivative financial instruments Coal and USD

		Notional Amount (USD k)		Value of *MtM* (BRL 000)		Accumulated Effect Current Period	
						Receivable (BRL k)	Payable (BRL k)
	Maturity	2009	2008	2009	2008	2009	2009
MPX COMERCIALIZADORA DE COMBUSTÍVEIS							
NDF contracts (i)							
Long Position							
USD/BRL	Feb/11 to Jul/11	81,112	-	(19,440)	-	-	(19,440)
MPX COMERCIALIZADORA DE COMBUSTÍVEIS							
NDF contracts (i)							
Long Position							
Coal	Feb/11 to Jul/11	81,112	-	(18,106)	-	-	(18,106)
MPX ENERGIA S.A							
NDF contracts (i)							
Long Position							
USD/BRL	Apr/11 to Jun/11	32,287	-	(4,707)	-	-	(4,707)
MPX ENERGIA S.A							
NDF contracts (i)							
Long Position							
Coal	Apr/11 to Jun/11	32,287	-	(2,607)	-	-	(2,607)
Consolidated Total				**(44,860)**	**-**	**-**	**(44,860)**

(i) The NDF Contracts (Non Deliverable Forwards) were signed with the following financial institution: Banco Citibank S/A; Standard Bank and Morgan Stanley.

For existing derivative financial instruments there is no relationship with foreign exchange options and no security margin requirement established therein.

The operations were duly registered at CETIP S.A. and BM&F ("Sao Paulo Futures and Commodities Exchange").

Value at Risk (VaR) of the operations (Not audited)

Company	Operation	VaR (Value at Risk - R$)
MPX Pecem II Geração de Energia S.A.	NDF USD/BRL	2,099,799
MPX Pecem II Geração de Energia S.A.	NDF Euro/USD	555,683
Porto do Pecém Geração de Energia S.A.	NDF USD/BRL	7,139,239
Porto do Pecém Geração de Energia S.A.	NDF Euro/USD	590,542
Porto do Pecém Geração de Energia S.A.	NDF Euro/BRL	224,323
UTE Porto do Itaqui Geração de Energia S.A.	NDF USD/BRL	3,665,029
UTE Porto do Itaqui Geração de Energia S.A.	NDF Euro/USD	396,929
Porto do Pecém Geração de Energia S.A.	FRA Libor	1,431,191
Porto do Pecém Geração de Energia S.A.	SWAP Libor IDC	77,229
UTE Porto do Itaqui Geração de Energia S.A.	FRA Libor	1,007,009
MPX Comercializadora de Combustíveis Ltda.	NDF USD/BRL	1,546,488
MPX Comercializadora de Combustíveis Ltda.	Commodities (coal)	344,054
MPX Energia S.A.	NDF USD/BRL	707,555
MPX Energia S.A.	Commodities (coal)	185,833
Total		19,970,903

Glossary (Not audited)

The Parametric VaR (maximum potential loss) has the following meaning: calculation of the potential loss over a given time interval, under market conditions and subject to a certain confidence level. The VaR is a concise statistical measurement that has been developed by estimating the standard deviation and correlation between the yields of several risk factors. The distribution of returns on Gaussian normal risk factors assumes a confidence level of 95% and holding period of one day.

The volatility calculation method in the above model takes into account the EWMA_Lambda model. The EWMA_Lambda (Exponentially Weighted Moving Average): is an exponential smoothing method for handling historic data.

Sensitivity analysis (Derivative)

MPX Energia S.A. and its subsidiaries produced four sensitivity scenarios in order to apply a stress test to each risk factor posed by the derivative instrument used and to quantify the variations of each risk factor in the mark-to-market of the operations.

The management of MPX Energia S.A. and its subsidiaries consider the following risk factors to be material:

- Local interest curve (fixed-rate)
- US Interest curve (Currency Coupon – Forward Rate Agreement)
- BRL - Ptax-800 – BACEN
- R$/Euro - Ptax (BACEN);
- Treasury Yield Curve
- Euros Coupon Curve and
- Coal curve.

Management does not believe the risk of spot interest rate variations is material.
The sensitized risk factors for NDF transactions were the following:

(i) The interest curves: Local interest curve (fixed-rate), US Interest curve (Currency Coupon – Forward Rate Agreement, Treasury Yield Curve), External Euro Coupon Curve and Treasury Yield Curve were subject to a stress at each point of the curve (parallel shift) at the following amounts:

- Scenario II: 25% upwards (positive inclination)
- Scenario III: 25% downwards (negative inclination)
- Scenario IV: 50% upwards (positive inclination) and
- Scenario V: 50% downwards (negative inclination).

(ii) The following percentages were applied to the closing prices of currencies denominated in Euro and US dollars converted into Reais:

- Scenario II: + 25%
- Scenario III: - 25%
- Scenario IV: +50%
- Scenario V: - 50%

(iii) The Libor curve of Libor Swaps was subject to the following percentage stresses at each vertex:

- Scenario II: 25% upwards (positive inclination)
- Scenario III: 25% downwards (negative inclination)
- Scenario IV: 50% upwards (positive inclination) and
- Scenario V: 50% downwards (negative inclination).

(iv) A stress point was applied to the coal fixing operations in the forward curve of API2:

- Scenario II: 25% upwards (positive inclination)
- Scenario III: 25% downwards (negative inclination)
- Scenario IV: 50% upwards (positive inclination) and
- Scenario V: 50% downwards (negative inclination).

Sensitivity analyses

Table 1: Stress scenario - Notional USD

				Sensitivity Analyses			
	Maturity	**Notional Amount (USD k)**	**Value of *MtM* (BRL k)**	**MTM Scenario II - Stress: 25% upwards**	**MTM Scenario III - Stress: 25% down**	**MTM Scenario IV - Stress: 50% upwards**	**MTM Scenario V - Stress: 50% down**
		2009	**2009**				
MPX ENERGIA S.A							
NDF contracts							
Long Position:							
USD/BRL	Apr/11 to Jun/11	32,287	(4,707)	10,333	(20,065)	25,068	(35,757)
UTE PORTO DE ITAQUI							
NDF contracts							
Long Position:							
USD/BRL	Jan/10 to Oct/12	184,190	(22,123)	58,530	(103,545)	139,363	(184,797)
Swap Libor Contracts:							
Receivable Position:							
Libor	Oct/17	228,652	386,393	470,546	286,345	560,497	192,135
Payable position:							
Fixed	Oct/17	228,652	(408,245)	(476,085)	(320,302)	(543,121)	(228,093)

				Sensitivity Analyses			
	Maturity	**Notional Amount (USD k)**	**Value of *MtM* (BRL k)**	**MTM Scenario II - Stress: 25% upwards**	**MTM Scenario III - Stress: 25% down**	**MTM Scenario IV - Stress: 50% upwards**	**MTM Scenario V - Stress: 50% down**
		2009	**2009**				
PORTO DO PECEM							
NDF contracts (iii)							
Long Position:							
USD/BRL	Jan/10 to Oct/12	189,740	(33,284)	57,171	(129,567)	143,532	(230,877)
Swap Libor Contracts:							
Receivable Position:							
Libor	Oct/17	163,500	276,288	340,696	207,962	405,381	139,854
Payable position:							
Fixed	Oct/17	163,500	(291,877)	(344,660)	(232,166)	(393,016)	(165,475)
Swap Libor IDC Contracts:							
Receivable Position:							
Libor	Nov/11	624,644	7,692	9,964	3,633	14,258	1,625
Payable position:							
Fixed	Nov/11	624,644	(11,404)	(13,378)	(8,080)	(16,001)	(5,405)
MPX PECEM II							
NDF contracts							
Long Position:							
USD/BRL	Jan/10 to Oct/12	106,399	(42,370)	5,659	(91,326)	53,571	(140,430)
MPX COMERCIALIZADORA DE COMBUSTÍVEIS							
NDF contracts (i)							
Long Position:							
USD/BRL	Feb/11 to Jul/11	81,112	(19,440)	18,449	(58,074)	55,625	(97,486)
Consolidated Total		2,627,320	(163,077)	137,225	(465,185)	445,157	(754,706)

Table 2: Stress scenario - Notional Euro

	Maturity	Notional Amount (€ k)	Value of *MtM* (BRL 000)	Sensitivity Analyses (BRL k)			
		2009	2009	MTM Scenario II - Stress: 25% downward	MTM Scenario III - Stress: 25% down	MTM Scenario IV - Stress: 50% upwards	MTM Scenario V - Stress: 50% down
UTE PORTO DE ITAQUI							
NDF contracts							
Long Position							
EUR/USD	Jan/10 to Dec/11	16,916	1,059	1,597	960	1,914	641
PORTO DO PECEM							
NDF contracts							
Long Position							
EUR/USD	Jan/10 to Jan/12	12,366	504	830	495	998	329
NDF contracts							
Long Position							
EUR/BRL	Jan/10 to Jan/12	4,809	(1,652)	1,625	(4,616)	4,727	(7,756)
MPX PECEM II							
NDF contracts							
Long Position							
EUR/USD	Jan/09 to Mar/11	25,174	6,711	8,694	5,240	10,409	3,502
Consolidated Total		**59.265**	**6,622**	**12,746**	**2,079**	**18,048**	**(3,284)**

Table 3: Stress scenario - Coal

	Maturity	Notional Amount (USD k)	Value of *MtM* (BRL 000)	Sensitivity Analyses			
				MTM Scenario II - Stress: 25% upwards	MTM Scenario III - Stress: 25% down	MTM Scenario IV - Stress: 50% upwards	MTM Scenario V - Stress: 50% down
		2009	2009				
MPX COMERCIALIZADORA DE COMBUSTÍVEIS							
NDF contracts							
Long Position							
Coal	Feb/11 to Jul/11	81,112	(18,106)	15,844	(36,666)	65,185	(39,835)
MPX ENERGIA S.A							
NDF contracts							
Long Position							
Coal	Apr/11 to Jun/11	32,287	(2,607)	13,495	(12,007)	36,298	(14,706)
Consolidated Total			**(20,713)**	**29,339**	**(48,673)**	**101,483**	**(54,541)**

18 Provision for contingencies

The Company and its subsidiaries are party to judicial proceedings, involving labor and civil issues to the estimated amount of R$3,312. Their legal advisors rate the proceedings as a possible loss, and management does not believe it is necessary to record a provision for them. The main proceedings rated as a possible defeat are the following:

a. Labor claim in which the plaintiff is claiming an employment relation and receipt of a percentage of the sale of shares of the former subsidiary MPX Termoceará Ltda.;

b. Civil class action brought by the Federal Prosecutor's Department in Corumbá, Mato Grosso do Sul, in conjunction with the State Prosecutor's Department of Mato Grosso do Sul, against IBAMA and Termopantanal Ltda. contesting the validity of the preliminary permit awarded by said institute to said subsidiary of MPX Energia S.A.

c. Civil class action brought by the Federal Prosecutor's Department of Maranhão state, contesting the legality of the preliminary permit awarded to the venture UTE Porto do Itaqui Geração de Energia S.A.

d. Lawsuit brought by the Federal Prosecutor's Department of Maranhão state, contesting the legality of the Municipal Decree that awarded special usage rights to UTE Porto do Itaqui Geração de Energia S.A. and the soil use conformity certificate issued to Diferencial Energia.

e. Lawsuit brought by the Federal Prosecutor's Department and IBAMA to revoke the permit awarded to UTE Porto de Itaqui Geração de Energia S.A. on the grounds that the agency with the authority to award this license is allegedly IBAMA.

f. Collection lawsuit filed with the obligation to contest the agreement regarding an alleged purchase and sale commitment signed by the parties (UTE Porto de Itaqui Geração de Energia S.A.).

g. Lawsuit brought by the Federal Prosecutor's Department requesting: (i) Semace and IBAMA refrain from awarding environmental permits in the area allocated for implementation of the Pecém industrial estate until the entire complex has received a permit, (ii) immediate shutdown of the construction of the UTE and (iii) that Ceará state subject the awarding of contracts for new ventures to the obtainment of a preliminary environmental permit by the industrial complex.

h. Taxation of payments and receipts related to the Fossil Fuel Consumption Account ("CCC") for IRPJ and CSLL.

19 Shareholders' equity

a. Capital

As of December 31, 2009 MPX Energia S.A.'s share capital was R$2,041,918 (R$2,041,695 on December 31, 2008), consisting of 136,692,680 common shares, distributed as follows:

Shareholder	2009	%	2008	%
EBX Investimentos Ltda	86,436,560	63.3	-	-
Eike Fuhrken Batista	9,416,220	6.9	4,809,102	71.60
Centennial Asset Mining Fund LLC	7,492,080	5.4	374,604	5.60
Other **(*)**	33,347,820	24. 4	1,647,408	22.80
Total	136,692,680	100.00	6,831,114	100.00

(*) Under the stock option plan of the Company's controlling shareholder, under which Company stock options it owned were granted to the Company's key executives, 329,260 MPXE3 stock options were granted to said executives on August 19, 2009.

After notifying the other Coordinators, on January 11, 2008 Banco UBS Pactual S.A. exercised its option to subscribe a supplementary lot of 118,261 common, book entry, nominative shares, with no par value, in the Company ("Shares of the Supplementary Lot"), at the price of R$1,006.63 per share, amounting to 6,831,114 shares.

On May 28, 2009 the Company made a capital increase of R$ 110, within the authorized capital limit, by issuing 1,759 new common shares resulting from the exercising of stock options that had been awarded at the extraordinary general meeting held November 26, 2007.

On July 17, 2009 the Company split the Company's common shares, whereby each common share was split into twenty shares of the same class.

Shares received under the share split will have the same rights and benefits as those to be awarded/distributed by the Company, including in the distribution of dividends and any capital remunerations approved in the future.

On December 15, 2009 the Company made a capital increase of R$ 112, within the authorized capital limit, by issuing 35,200 new common shares resulting from the exercising of stock options by the Company's directors.

On December 31, 2009 as a subscription to the share capital increase, the Company's controlling shareholder Mr. Eike Batista transferred 86,436,560 common shares of the Company (63.3% of MPX's capital) to the company EBX Investimentos Ltda.

MPX Energia S.A. is bound to arbitration at the Trade Arbitration Chamber, as per the arbitration clause in its Bylaws.

b. Profit reserves

The profit reserve was recorded as of December 31, 2008 in accordance with the following practices:

- *Legal reserve*

  Recorded at the rate of 5% of net income for FY 2008 up to the limit of 20% of the share capital, as stipulated in article 32 (2, "a") of the Bylaws of MPX Energia S.A. and pursuant Law 6.404/76 ("Brazilian Corporation Law"), amended by Law 11638/07.

- *Retained earnings reserve*

  The Board of Directors Meeting held on March 27, 2009 approved the Executive Board's proposal to create the profit potential reserve named Investments Reserve to the amount of R$8,539, as stipulated in article 32 (2,"f") of the Bylaws of MPX Energia S.A. This reserve has been made to finance the expansion of the activities of MPX Energia S.A. and its subsidiaries, including through subscription of capital increases or creation of new ventures.

  The reserve can be allocated up to 100% of the net income for the year, after the compulsory and statutory allocations have been made (legal reserve and payment of the minimum mandatory dividends) where this balance plus the balances of the other profit reserves, except for the unrealized profits reserves and contingencies reserve, may not exceed 100% of the subscribed share capital.

c. Dividends

The Bylaws (article 32, 3) of MPX Energia S.A. stipulate the distribution of minimum mandatory dividends at 25% of the net income for the year minus the amount allocated to the Legal Reserve, pursuant to Law 6404/76 ("Brazilian Corporation Law"). The Board of Directors Meeting held on March 27, 2009 approved the Executive Board's proposal to pay out minimum mandatory dividends referring to the income for FY 2008 of R$48,468.

On June 26, 2009 MPX Energia S.A. paid out dividends of R$48,468 to shareholders, or R$7.0952 per share, based on the adjusted net income before the financial year ended December 31, 2008, in accordance with the amount resolved at the Company's Annual General Meeting held April 28, 2009.

The Company recorded a loss in FY 2009, and did not pay out dividends in the financial year ended December 31, 2009.

d. Capital reserve

This refers to the recording of the stock option plan, in compliance with CPC Technical Pronouncement 10 - Share-based payments, approved by CVM Resolution 562/08.

e. Accumulated translation adjustments

This refers to the recording of the exchange variance of the direct and indirect subsidiaries MPX Energia de Chile Ltda., MPX Colômbia S.A., MPX Áustria GmbH and MPX Viena GmbH, in order to comply with CPC Technical Pronouncement 02, approved by CVM Resolution 562/08.

f. Equity valuation adjustments

This refers to the changes in the fair value of the derivative instruments known as cash flow hedges. They are directly recognized in a specific valuation adjustment in the shareholders' equity, as per Note 17.

20 Stock option plan

Stock options granted by the controlling shareholder

To motivate our main executives and managers, in April 2008 the controlling shareholder granted stock options over shares in the Company to these professionals by way of a "Private Stock Option Agreement", at no cost to and without diluting minority interests.

These options are a means of remunerating and retaining these professionals, which the controlling shareholders considered to be key players in the Company's success. A total of 1,603,140 fully paid-in shares have been made available, equal to 1.17% of the Company's total stock.

The call options will be exercised at the approximate proportion of 20% a year, starting December 13 each year and for a term of five years, starting in 2008. The shareholder rights and privileges will be awarded after the shares have been transferred.

Under this agreement the transferred shares cannot be sold without the express consent of the controlling shareholder. This constraint applies until December 13, 2010.

On August 19, 2009 the company's executives were granted 329,260 MPXE3 stock options.

The Company's financial statements have not been affected because these options have been awarded by the controlling shareholder.

Stock options granted by the Company

The Extraordinary General Meeting held November 26, 2007 approved the creation of the Stock Option Program ("Program") for shares of MPX Energia S.A.

Under this Program, the five members of the Board of Directors may exercise Company stock options for a total of 38,696 shares each.

The options will be exercised at the proportion of 20% on each of the first five anniversaries of the public offering, made on December 14, 2007.

The Extraordinary General Meeting held December 07, 2007 approved the reverse split of MPX's shares, whereby each 22 common shares of the Company is grouped into 1 common share, meaning the number of options awarded to the recipient under the program rose from 38,696 to 1,758.

The Board of Directors meeting held May 28, 2009 also approved the purchase of 1,760 shares, consisting of 352 for each program recipient, maturing on December 13, 2008.

The Extraordinary General Meeting held July 17, 2009 approved the splitting of MPX's shares, whereby each common share of the Company was split into 20 (twenty) common shares, meaning the number of unexercised options in the stock option program rose from 7,030 to 140,600.

The fair value of R$3,668 of the options granted was recognized in the income statement for 2008. Remuneration in the period of R$2,094 had been appropriated as of December 31, 2009. Details follow:

The second maturity took place on December 13, 2009 and the 35,200 options were exercised by way of a capital increase recorded in the minutes from the board of directors meeting held December 15, 2009.

Stock options granted

Date granted	Vesting conditions	Maturity	Expiry	Number of options granted
		12/12/2008	12/13/2009	35,160
	5 years of service	12/13/2009	12/13/2010	35,160
	provided as a	12/13/2010	12/13/2011	35,160
28/4/2006	company director	12/13/2011	12/13/2012	35,160
		12/13/2012	12/13/2013	35,160
				175,800

	2009	
	Strike Price R$/share	Number of options
Balance at November 27, 2007	3.09	175,800
Exercised in 2008		
Balance at December 31, 2008	3.09	175,800
Exercised in 2009	3.20	(70,400)
Balance at December 31, 2009	3.22	105,400

	2009
Number of exercisable options as of December 31, 2009	-
Average outstanding term (years)	2.99
Fair value of options awarded in R$	17.96
Average weighted price of the shares in R$	22.50
Exercise price of the options in R$	3.20
Expected volatility	25.89% to 27.60%
Expiration date of the options (years)	3
Interest rate free of risk (average)	6.41%
Effects in the income statement for the period:	
Grant of share options R$ thousand	2.095
Intrinsic value (R$ k)	2.036

21 Financial income/loss

The Company's financial income breaks down as follows:

	Parent Company		Consolidated	
	2009	2008	2009	2008
Financial expenses:				
Bank expenses	(31)	(43)	(50)	-
IOF	(35)	(137)	-	(231)
CPMF	-	(49)	-	(49)
Interest	(284)	(4,711)	(3,496)	(5,350)
Exchange variance	-	102	(100,812)	-
Loss on derivative transactions	(79,759)	-	(553,099)	-
R&D	-	-	(37)	-
	(80,109)	(4,838)	(657,494)	(5,630)

	Parent Company		Consolidated	
	2009	**2008**	**2009**	**2008**
Financial revenue:				
Loan interest	3,903	5,082	-	5,863
Interest-earning bank deposits	139,593	214,000	158,974	214,450
Gains on derivative transactions	21,651	94,006	352,924	94,006
Monetary variance	782	2,887	97,460	2,887
Other	1,749	3	1,681	15
	167,678	315,978	611,039	317,221
Net financial income	87,569	311,140	(46,455)	311,591

22 Other expenses

The Company's expenses break down as follows:

	Parent Company		Consolidated	
	2009	**2008**	**2009**	**2008**
Donations, contributions	(1,815)	(3,030)	(2,893)	(3,030)
Advertising and marketing	(562)	(3,852)	(1,330)	(3,852)
Subscriptions and Publications	(93)	(342)	(451)	(342)
Legal Expenses	(60)	(198)	(1,802)	(198)
Leasing and Rentals	(854)	-	(3,834)	(503)
Other	(485)	(922)	(982)	(511)
	(3,869)	(8,344)	(11,292)	(8,436)

23 Commitments

The main commitments undertaken with suppliers of goods and services are the following:

Subject matter of contract	Start date	Expiry date	Total contracted	Contract Balance	
				2009	2008
Environmental permit	06/20/2009	6/30/2010	510	300	-
EIA/RIMA Study	06/20/2009	6/30/2010	2,200	1,870	-
Environmental conservation	11/30/2007	11/30/2022	10,500	9,100	10,111
EIA/RIMA Study	11/30/2007	01/30/2010	5,691	295	220
Engineering consultancy	01/02/2008	02/01/2009	970	-	384
Advertising	01/02/2008	02/01/2009	800	-	665
EIA/RIMA Study	07/17/2008	07/30/2010	2,345	-	1,188
Land leasing	01/06/2009	12/31/2010	570	360	-
Share transfer	08/05/2008	Indefinite	2,425	1,865	2,145
P.N.dos Lençóis Maranhenses	02/01/2009	10/30/2018	4,200	3,976	-
Acquisition of monitoring station	09/30/2009	2/28/2010	895	895	-
EIA/RIMA Tailings Dam Study	11/17/2009	03/30/2010	1,045	539	-
Equipment and services	02/01/2008	03/30/2009	1,009	13	170
Geothermal investigation	03/18/2008	05/17/2008	1,303	-	1,303
Foreign Trade Advice	08/27/2008	Indefinite	3,000	2,900	2,970
Construction of UTE-EPC*	01/27/2008	11/19/2011	969,609	485,311	723,548
Environmental compensation**	09/05/2008	09/05/2010	4,500	3,900	4,500
Owner's engineering*	12/20/2007	02/20/2013	9694	5196	5,787
Owner's engineering*	12/20/2007	02/20/2013	3,392	1,708	2,336
Owner's engineering*	12/20/2007	02/20/2013	7,116	3,582	5,239
Transmission Line	09/01/2009	07/01/2010	14,150	10,473	-
Services	Other	Other	9,052	8,648	-
Operating Leasing	Other	Other	6,056	5,089	-
Construction of UTE-EPC	11/06/2008	06/06/2012	1,034,860	709,958	1,007,582
Construction of UTE-EPC	04/01/2009	06/06/2012	5,371	4,349	-
Construction of UTE-EPC	04/01/2009	06/06/2012	3,764	3,734	-
Environmental compensation**	09/05/2008	06/06/2012	4,850	4,850	-
Services	Other	Other	6,952	6,261	-
Operating Leasing	Other	Other	46,698	45,343	-
Construction of UTE-EPC	01/27/2008	08/27/2011	1,007,768	560,512	751,260
Owner's engineering	07/17/2008	12/17/2012	14,791	3,106	14,791
Environmental consultancy	06/10/2008	10/10/2009	682	70	604
Energy consultancy	12/22/2007	03/31/2013	40,000	-	20,000
Environmental Consultancy	12/19/2008	06/17/2009	2,562	-	-
Implementation of emergency generation plan	2/20/2009	3/22/2011	896	122	-
Inspection of turbine and boilers	4/14/2009	5/142010	2,000	1,897	-
Occupational safety and management service	6/22/2009	6/22/2012	735	725	-
Supply of substation and 230Kva transmission line	6/19/2009	11/1/2010	22,124	18,326	-
Engineering Service	1/9/2009	6/9/2010	2,500	1,000	-

Subject matter of contract	Start date	Expiry date	Total contracted	Contract Balance 2009	Contract Balance 2008
Implementation and development of environmental, social and economic services	7/9/2009	6/9/2010	851	756	-
Supply of coal conveyor transportation system	7/24/2009	2/1/2011	95,873	91,252	-
IT SERVICES	8/11/2009	8/10/2012	698	644	-
Project Management Services	9/21/2009	1/21/2012	4,000	3,280	-
Supply of ship unloading equipment	10/7/2009	1/7/2011	15,845	7,130	-
Organic Waste Disposal Services	11/30/2009	1/19/2010	575	575	-
Technical assistance, project, sea water extraction engineering services	12/8/2009	4/29/2010	1,293	1,293	-
Owner´s Engineering	12/10/2009	3/9/2012	9,883	9,883	-
Owner´s Engineering	12/10/2009	2/9/2012	4,695	4,695	-
Owner´s Engineering	12/10/2009	2/9/2012	3,490	3,490	-
Mobilization of the work site	12/28/2009	12/28/2010	4,400	4,400	-
Construction of the Water Treatment System	12/28/2009	12/28/2010	7,874	7,874	-
Loan contract for pass-through of foreign loan	12/28/2009	12/28/2010	3,543	3,543	-
Project management	03/12/2008	04/05/2008	4,560	207	207
Substitution of Assembly	12/01/2007	Indefinite	7,261	-	170
Basic design	04/01/2008	09/01/2008	1,200	120	860
Equipment and services	12/18/2007	Indefinite	560	-	-
Equipment and services	10/11/2007	Indefinite	1,271		-
Equipment and licenses	10/11/2007	Indefinite	1,241		-
Civil construction services and products	12/01/2007	Indefinite	660	47	424
Systems	01/10/2008	06/30/2009	1,168	142	142
Equipment	12/01/2007	Indefinite	21,976	-	-
Equipment	12/17/2007	10/01/2009	530	-	-
Equipment	12/01/2007	Indefinite	998	129	595
Employee transportation	11/9/2009	11/9/2012	968	914	-
			3,453936	**2,045,733**	**2,557,201**

* The figures presented include commitments undertaken by the subsidiary in conjunction with Pecém Geração de Energia S.A, to an amount equal to the Company's percentage interest (50%)

** The environmental compensation amounts are being included as and when the construction costs are incurred.

24 Insurance coverage

It is the policy of the Company and its direct and indirect subsidiaries to take out insurance coverage for the assets subject to risk at amounts considered by management sufficient to cover any incidents, considering the nature of their activity. The risk assumptions adopted, given their nature, are not part of an audit of financial statements and, accordingly, were not examined by our independent auditors. The policies are in force and the premiums have been paid. The company considers its insurance coverage is consistent with other companies of similar sizes operating in the sector.

As of December 31, 2009 and 2008, the main risks covered are:

	Consolidated	
	2009	**2008**
Material damages	4,401,415	1,810,799
Civil liability	262,000	160,000

25 Subsequent events

a. MPX assures a logistical solution for its integrated mining system in Colombia.

MPX Energia S.A. announces that, in accordance with its business plan, it has procured a logistical solution for its integrated mining system in Colombia. The Company acquired 521 hectares of land in the region of Dibulla, La Guajira, as recommended in the study produced by US consultancy firm Moffat & Nicol, specializing in port studies and solutions. The acquired area is located on the Colombian Atlantic coast, approximately 150 km from MPX's franchise areas. The environmental licensing process has commenced for a port with a draught of up to 20 m, enabling it to operate with capesize ships and with the capacity to export up to 20 million tons of coal a year.

b. Constitution of reserve – BNDES Contract

In compliance with the financing contract with the BNDES, in January 2010 MPX Energia S.A. made a reserve to cover all of its own funds that had not been paid in amounting to R$289 million and an additional contingency reserve of R$106 million.

c. New pronouncements, interpretations and recommendations issued but not implemented

Within the conversion process of the accounting practices adopted in Brazil to the international financial reporting standards (IFRS) various pronouncements, interpretations and guidance were issued during year 2009 including the mandatory application for the years ended as from December 2010 and for the 2009 financial statements to be disclosed jointly with the 2010 financial statements for comparison purposes.

The Company has been evaluating the potential effects with respect to these pronouncements, interpretations and guidance, which may have material impact on the financial statements for the year ended December 31, 2009 to be comparatively presented with the financial statements for the year ending December 31, 2010, as well as for the coming years.

The consolidated financial statements for the next financial year shall be prepared in accordance with CPC 37 – Initial Implementation of International Accounting Standards (Text valid for listed companies about to implement IFRS for the first time), as per CVM Instruction 457 of July 13, 2007.

d. Açu Port Leasing Contract

A leasing contract was signed on February 13, 2010 for an area of 330 hectares, located in the area of Açu Port. The contract was between LLX Açu Operações Portuárias S.A., as lessor, and UTE Porto do Açu Energia S.A. , as lessee.

* * *

CEO and Investor Relations Officer:
Eduardo Karrer

Executive Board:
Rudolph Ihns
Xisto Vieira Filho
Marcus Bernd Temke
Bruno de Rossi Chevalier
Paulo Monteiro Barbosa Filho

Board of Directors:
Eike Fuhrken Batista,
Flavio Godinho,
Paulo Carvalho deGouvêa,
Eliezer Batista da Silva,
Rodolpho Tourinho Neto,
Luiz do Amaral de França Pereira,
Samir Zraick,
Luiz Rodolfo Landim Machado
Raphael Hermeto de Almeida Magalhães.

Accountant:
Ana Paula Vergetti Diniz
CRC 087040/O-9